④ **CAT5**

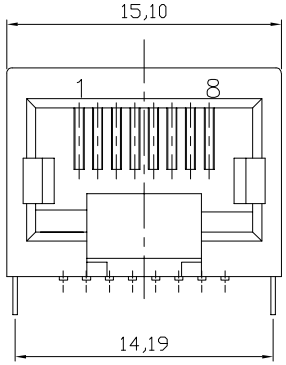

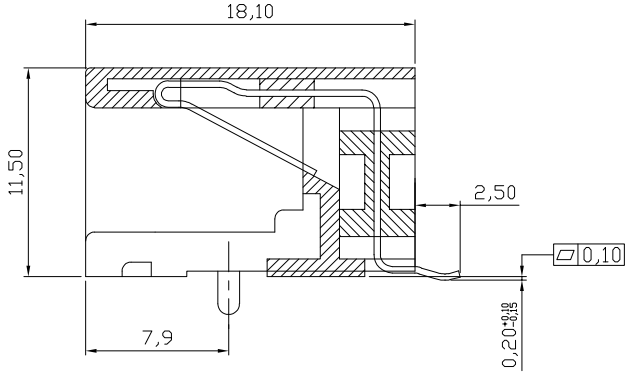

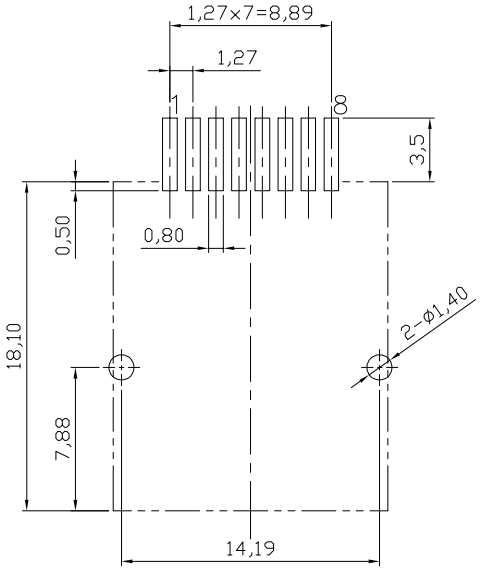

PCB Layout Component Side Shown

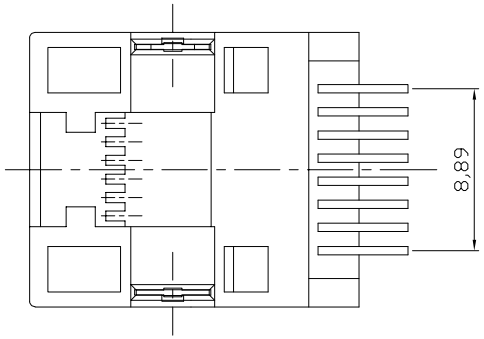

NOTES:
Mechanical:
1. Housing material : High Temp. UL94V-0 ,
Color: Black
2. Contact material: Phosphor Bronze t=0.35mm
⑤③ 3. Contact plating: 6u" Gold on tact area
100~200u" Tin on solder area
all over 30~50u" Nickel
4. Operating Life: 750 Cycles min.
5. PCB Retention Post-solder: 10 LBS min.
Electrical:
1. Voltage Rating: 125VAC.
2. Current Rating: 1.5AMP.
3. Contact Resistance: 35mΩ max.
4. Insulation Resistance: 1000MΩ min. @ 500 VDC
5. Dielectric Strength: 1000 VAC 60Hz, 1 min.
Environmental:
1. Storage: -40°C To +85°C
② 2. Operation: -40°C~+85°C
③ 3. IR Reflow Soldering Temp.: 255°C~265°C 5~10S

③ Packing: 150pcs/Tape reel, 1500pcs/Carton

RoHS compliant
Unit:mm

File No.: E345352

Scale	Free
TOLERANCE	
X.X	±0.20
X.XX	±0.15
X.XXX	±0.10
DIM	TOL
Angle	±5°

Id.	Modification	Date	Name
⑤	Update the contact plating	25.08.2015	Amy
④	Add "CAT5"	14.11.2014	Amy
③	Update	27.05.2013	Amy
②	Update	24.01.2013	Amy
①	Drawn	15.07.2009	Dean

	Date	Name
Drawn	15.07.2009	Dean
Approved	25.08.2015	Amy

ASSMANN wsw components

Customer-No.

ASSMANN WSW-No. A-20042-LP/SMT-C

Drawing-No. ASS 1052B CO

rev05

Replace

SHEET