REV.	DATE	DESCRIPTION
A	11/31/01	MODIFY CONTACT PIN
B	10/31/05	UPDATE DRAWING FORMAT, MODIFY CRIMP NOTES
C	02/15/07	REVISE CONTACT PIN AND FERRULE DIMENSIONS

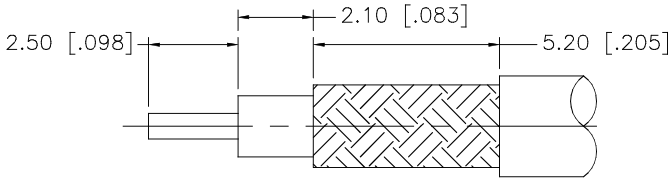

RECOMMENDED CABLE
STRIPPING DIMENSIONS

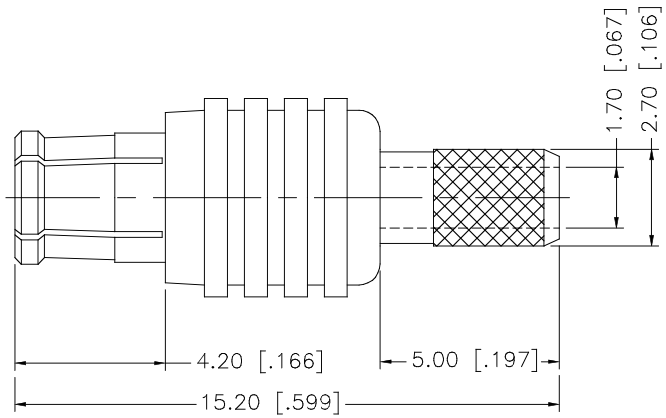

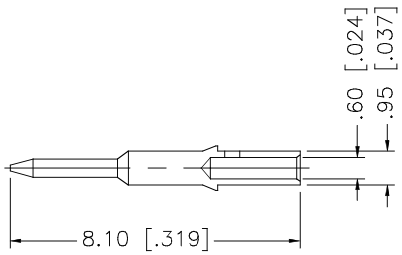

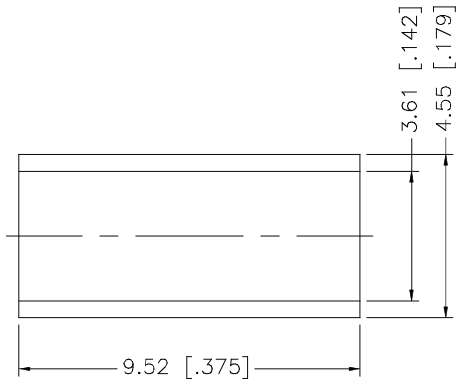

NOTE:

1. CRIMPED FERRULE HEX CRIMP SIZE .151"
2. CRIMPED CONTACT PIN SQ. CRIMP SIZE 0.7(mm)

	DESCRIPTION	MATERIAL	FINISH	QTY
8				
7				
6				
5	FERRULE	COPPER	GOLD	1
4	CONTACT PIN	BRASS	GOLD	1
3	INSULATOR	TEFLON	NATURAL	2
2	BODY	BER. COPPER	GOLD	1
1	HOUSING	BRASS	GOLD	1

UNLESS OTHERWISE SPECIFIED DIMENSIONS ARE IN MILLIMETERS. DIMENSIONS IN [ ] ARE IN INCHES AND FOR CUSTOMER REFERANCE ONLY.

UNLESS OTHERWISE SPECIFIED TOLERANCES FOR MILLIMETERS ARE:
0.5 – 8mm ± 0.20mm
8 – 30mm ± 0.40mm
30 – 120mm ± 0.50mm

UNLESS OTHERWISE SPECIFIED TOLERANCES FOR INCHES ARE:
.020 – .315 = ± 0.007"
.315 – 1.180 = ± 0.015"
1.180 – 4.724 = ± 0.020"

DO NOT SCALE DRAWING

APPROVALS		DATE
DRAWN	G.R.S.	02/15/07
CHECKED		
ISSUED		
SHEET	1 OF 1	
CAD FILE	C:/252/252121–75.DWG	

Amphenol Connex

PART DESCRIPTION: MCX STRAIGHT CRIMP PLUG – GOLD (FOR RG–3179/U DOUBLE BRAID)

PART NO. 252121–75

DWG. NO. 252121–75.DWG | REV. C | SIZE A | SCALE NA