ADC is now
Tyco Electronics

Optical Distribution Frames

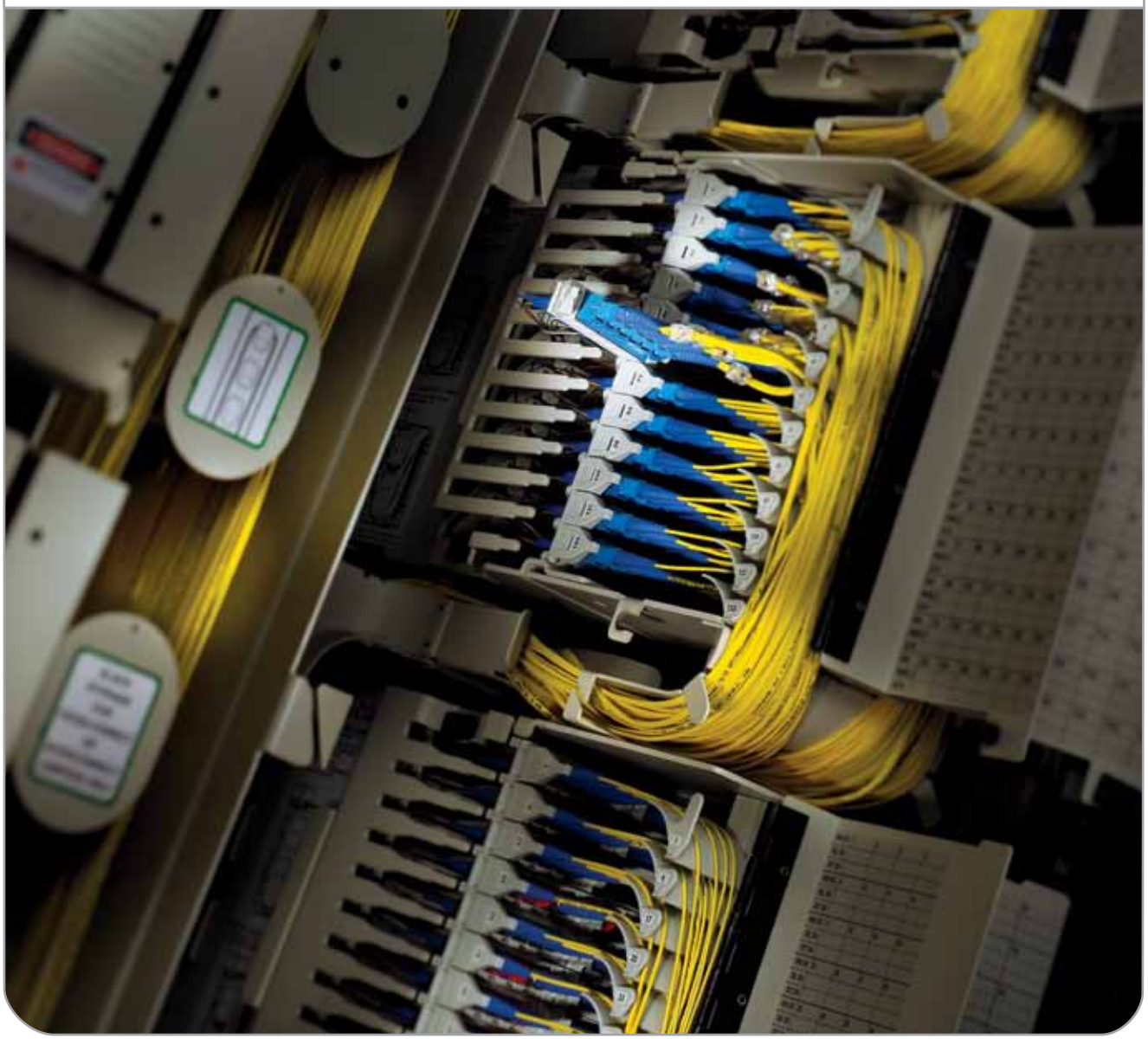

3rd Edition

Table of Contents

Introduction 1

High-Density Frame Solutions

NGF Optical Distribution Frame 4
Introduction 4
Things to Consider When Ordering 6
Fiber Main Distributing Frame 10
Front Facing Fiber Main Distributing Frame 11
Fiber Slim Rack 12
Preterminated Fiber Termination Blocks with Multifiber Cable-IFC 13
Preterminated Fiber Termination Blocks with MPO Connectors 15
Adapter-Only Fiber Termination Blocks 16
Adapter-Only Fiber Termination Blocks-Conversion Kits 17
Cable Clamping Kit and Block Conversion Kit 17
Fiber Combination Blocks 18
Fiber Combination Block Accessories 20
Value-Added Module (VAM) MicroVAM Chassis 21
Accessories
Fiber Optic Terminal Jumper Storage Panel 22
Fiber Optic Terminal Jumper Storage Panel Zoning Recommendations 23
Fiber Optic Terminal Jumper Storage Panel Ordering Information 24
NGF to NG3® Frame Spacer Kit 25
End Guard 26
Work Shelf 26
Frame Extender 27
Grounding Kit 27
AC Outlet Kit 27
Frame Installation Kit 28
Isolation Pad 28
Cable Clamp Kit 29
Sliding Adapter Pack 30
Standard Cross-Connect Patch Cord Lengths 31
Ordering Information for Patch Cords and Attenuators 31

NG3® Optical Distribution Frame 32
Introduction 32
Things to Consider When Ordering 33
Fiber Main Distributing Frame 36
Equipment Frame 37
Preterminated Fiber Termination Panels with Multifiber Cable-IFC 38
Adapter-Only Fiber Termination Panels 39
Cable Clamp Kit 40
NG3® VAM Chassis 41
Accessories
Fiber Optic Terminal Storage Panel (Rear Facing) 42
NGF to NG3® Frame Spacer Kit 43
End Guard 44
Work Shelf 44
Writing Shelf 44
Frame Extender 45
Grounding Kit 45
AC Outlet Kit 45
Frame Installation Kit 46
Isolation Pad 46
Lock 46

continues…

4/11 • 1037742AE

Table of Contents

Sliding Adapter Pack 47
Standard Cross-Connect Patch Cord Lengths 48
Ordering Information for Patch Cords and Attenuators 48

Traditional Frame Solutions

8-Inch FCM Optical Distribution Frame 49
Introduction 50
Things to Consider When Ordering 51
Fiber Main Distributing Frame (Rear Load) 53
Preterminated Fiber Termination Panels with Multifiber Cable-IFC 54
Adapter-Only Fiber Termination Panels 55
Splice Panels 56
Value-Added Module (VAM) Chassis 57
Accessories
Interbay Management Panel 58
Fiber Optic Terminal Storage Panel (Rear Facing) 58
End Guard 58
Guard Box (Under Floor) 60
Frame Installation Kit 61
Horizontal Cable Trough 63
Frame Filler Plate 63
AC Outlet Kit and Raceway 64
Rack Extenders 64
Grounding Kit 65
Vertical Cable Guide (VCG) Kit 66
Blank Panel 66
Cable Clamp Kit and Dual Cable Clamp Kit 66
Assembled Splice Tray and Chip 67
Splice Protector Sleeve 67
Standard Cross-Connect Patch Cord Lengths 68
Ordering Information for Patch Cords and Attenuators 68

LSX Optical Distribution Frame 69
Introduction 69
Things to Consider When Ordering 70
High-Density Distribution Frame Solution (using 288-Termination-Only panel) 71
High-Density Distribution Frame Solution (using 288-Termination/Splice panel) 72
Homerun Splitter Solution 73
Traditional LSX Universal Fiber Distributing Frame Solution 74
Preterminated Fiber Termination Panels with Multifiber Cable 75
Adapter-Only Fiber Termination Panels 76
Preterminated Fiber Termination/Splice Panels with Pigtails 77
Splice Panels 79
LGX® Compatible Value-Added Module (VAM) Chassis 80

Table of Contents

Accessories
- Frame Installation Kit 81
- Interbay Management Panel 83
- End Guard 83
- AC Outlet Kit and Raceway 84
- Rack Extenders 84
- Splice Tray 85
- Cable Clamp Kit 85
- Cable Ring Kit 85
- Standard Cross-Connect Patch Cord Lengths 85
- Ordering Information for Patch Cords and Attenuators 85
- Adapter Pack 86

Cabinet Solutions

Fiber Splice Cabinets 88

Accessories 89

Splice Enclosure Solutions

Fiber Entrance Cabinet 92
- Introduction 92
- Cabinet Solutions 92

Accessories
- Cable Clamping Kit 93
- Splice Tray 93
- Breakout Kit for Ribbon in Loose Buffer Tube (RLBT) OSP Cable 94
- Breakout Kit for Ribbon Central Tube (RCT) OSP Cable 95
- RCT Breakout Kit Typical Configurations 96
- Breakout Kit for Intrafacility (IFC) Ribbon Cables 97
- IFC Breakout Kit Typical Configurations 98
- Protective Tubing Cutting Tool 99
- Grounding Kit 99
- Splice Protector Sleeve 100
- Grounding/Moisture Blocking Kits 100

Cable Assembly Solutions

Cable Assembly Solutions 103

Introduction 103
- Tracerlight® Connector Identification System (Power Source and Patch Cords) 104
- Tracerlight Singlemode or Multimode Patch Cords 105
- Singlemode Patch Cords 106
- Multimode Patch Cords 107
- In-Line Attenuators 108

Index 109

Optical Distribution Frames
Introduction

Enabling the Next Generation of High-Speed Networks

Lower operations costs, greater reliability and flexibility in service offerings, quicker deployment of new and upgraded services — these are the characteristics of a successful service provider in a competitive, global market.

As high-bandwidth networks such as SONET and FTTX are built, far more fiber is required. But deploying fiber is not enough; a successful fiber network also requires a well-designed infrastructure based on solid fiber management fundamentals. Management of fiber cables has a direct impact on network reliability, performance and cost. It impacts network maintenance and operations, as well as the ability to reconfigure, expand the network and implement new services.

The ADC family of Optical Distribution Frame (ODF) solutions delivers the crucial elements of fiber cable management: connector and cable accessibility, bend radius protection, cable routing paths and physical protection. If these elements are executed correctly, the network can deliver its full competitive advantages.

- **Connector and Cable Access:** Allowing easy access to connectors and installed fibers is critical in maintaining proper bend radius protection. ODF products ensure that any fiber can be installed or removed without inducing a macrobend on an adjacent fiber. The accessibility provided by features such as sliding adapter packs can have a significant impact on network reconfiguration time. Accessibility is most critical during network reconfiguration operations and directly impacts operation costs and network reliability.
- **Bend Radius Protection:** Simply put, optimal signal flow ensures network performance and reliability. ADC's ODF products ensure that the proper bend radius is maintained to prevent attenuation and deliver the highest possible performance as well as long-term reliability. **Note:** Reduced bend radius cable solutions, while offering a tighter bend radius, are not a substitute for well-engineered cable management.
- **Cable Routing Paths:** Improper technician routing of fibers is one of the major causes of bend radius violations. ODF products are extremely craft friendly, providing routing paths that are clearly defined and easy to follow —leaving no room for guesswork and ensuring that technicians can easily trace and locate fibers.
- **Physical Protection:** All fibers should be protected throughout the network from accidental damage by technicians and equipment. Fibers routed between pieces of equipment without proper protection are susceptible to damage, which can critically impact network reliability. ADC's robust fiber cable management technology ensures that every fiber is well protected and designed to withstand daily wear and tear.

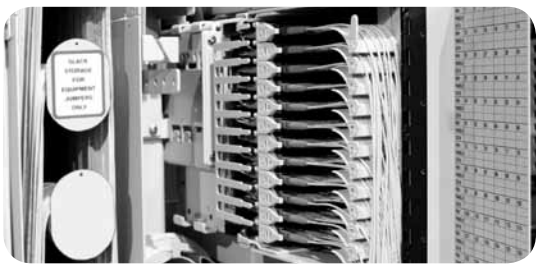

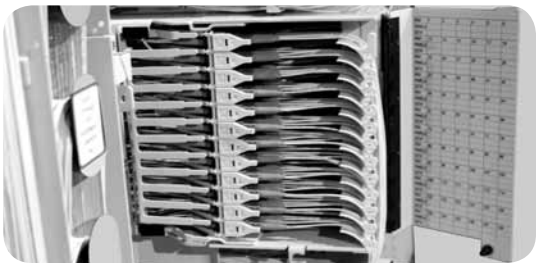

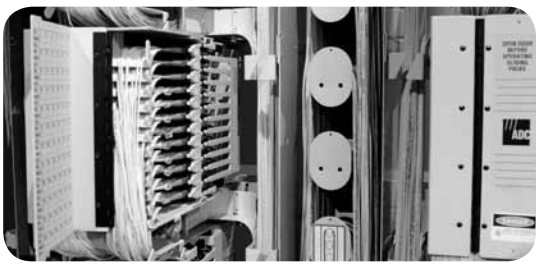

4/11 • 103742AE

Optical Distribution Frames

Introduction

ADC's **Next Generation Frame (NGF)** is the industry-leading high-density fiber management solution, accommodating the rapid growth and expansion of the fiber network while reducing jumper pile-up in horizontal troughs. The ability to easily access connectors and manage fiber cables has a direct impact on network reliability, performance and cost. As networks require expansion, reconfiguration and implementation of new services to the end customer, ADC's NGF is a versatile solution that will satisfy network requirements for years to come.

Additional solutions in the ODF portfolio include:

- **NG3®** – Telecordia® GR-449-CORE-Issue 2 compliant frame solution, providing up to 1,440 terminations
- **FCM** – traditional frame solution utilizing an angled retainer design for better cable management
- **LSX** – industry-standard frame solution that consists of panels loaded with straight adapter technology
- **OMX600®** – versatile cabinet solution that incorporates termination, splicing and storage demands
- **Fiber Cable Assembly and Accessory Products** – a comprehensive line of patch cords, IFC assemblies, attenuators, FasTerm® connectors and adapters to meet the demanding needs of today's network

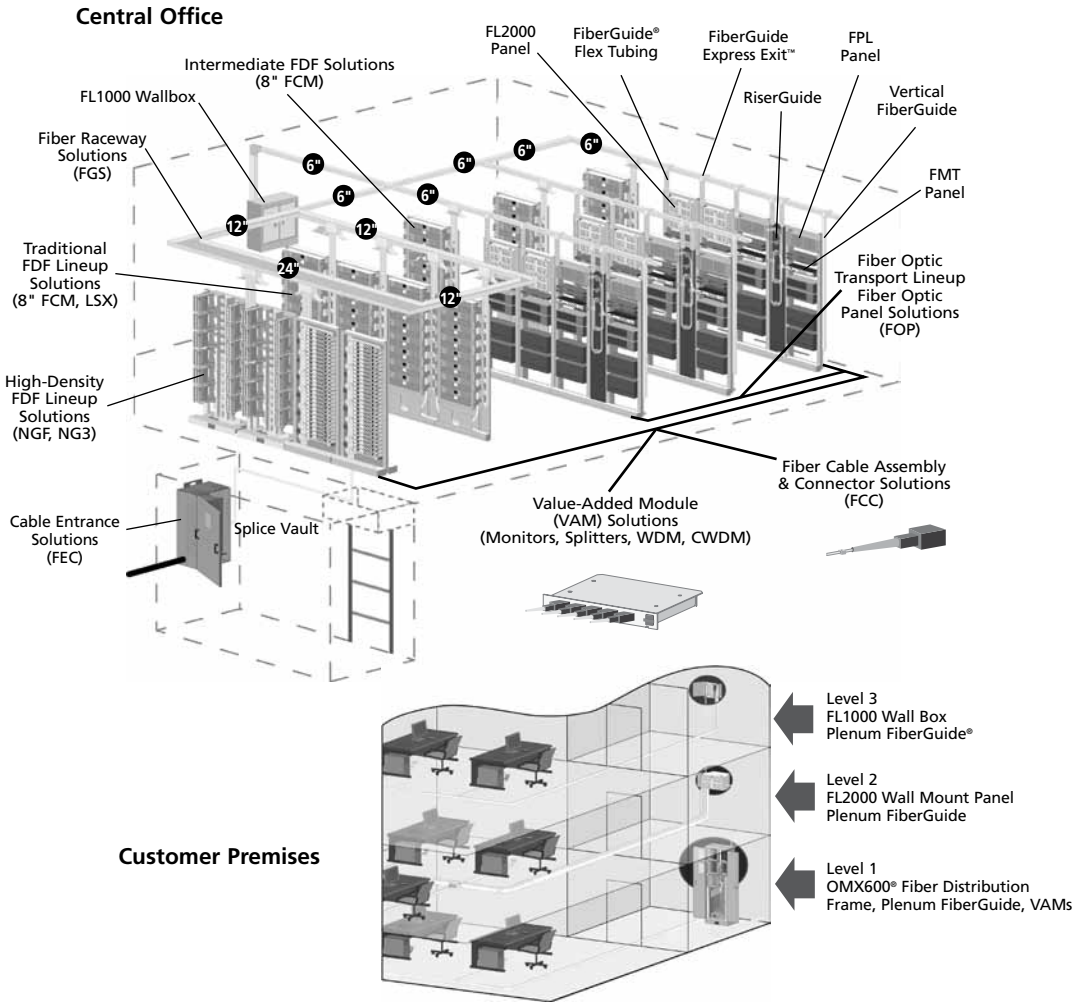

4/11 • 1037742AE

High-Density Frame Solutions

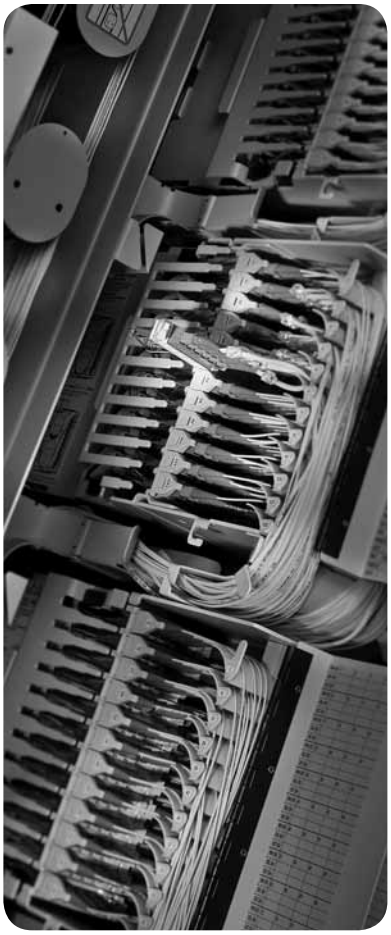

NGF Optical Distribution Frame

Introduction 4
Things to Consider When Ordering 6
Frames 10
Termination Blocks 13
Combination Blocks 18
Value-Added Module (VAM) Chassis 21
Accessories 22
Standard Cross-Connect Patch Cord Lengths 31

NG3® Optical Distribution Frame

Introduction 32
Things to Consider when Ordering 33
Frames 36
Termination Panels 38
Value-Added Module (VAM) Chassis 41
Accessories 42
Standard Cross-Connect Patch Cord Lengths 48

NGF Optical Distribution Frame

Introduction

Frame

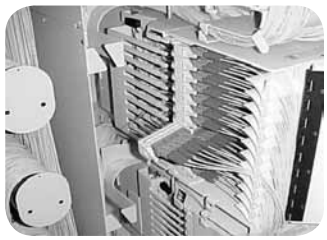

ADC's next generation frame (NGF) product line has fiber frames designed to fit a variety of network applications. Each frame option is designed with an emphasis on superior cable management and ease of use, including features such as ample trough space for cable and jumpers, easy access to connectors and storage for jumpers. The frame sections are shipped from the factory fully equipped with all cable management hardware including integrated jumper slack storage.

Fiber Termination Block (FTB)

ADC's FTB is available with industry-standard adapters in block configurations of 72-, 96- and 144-positions. Also, a 192-position FTB is available using LC adapters. FTBs utilize sliding adapter packs to gain easy access to both the front and rear terminations. To accommodate varying network requirements and speed installation, FTBs can be ordered with adapters only or preterminated with either intrafacility cable (IFC) or outside plant (OSP) cables.

Fiber Combination Block (FCB)

Our FCB provides termination and on-frame splicing capabilities. This configuration occupies two mounting positions on the frame section. They are available with industry-standard adapters in block configurations of 72-, 96- and 144-positions. An FCB with 192-positions is also available using LC adapters.

Value-Added Module Block (VAM)

Adding signal management and enhancement functions, such as splitters, couplers and wavelength division multiplexers, optimizes the value of your fiber network, by providing nonintrusive access to the optical signal for monitoring and testing signal integrity. There is a block configuration available to accommodate Micro Value-Added Modules (MicroVAMs) for applications requiring splitters or WDMs.

Fiber Optic Terminal Storage Panel

ADC's fiber optic terminal storage panel is used as a storage apparatus for up to 16 feet of equipment (FOT) jumpers at the fiber frame lineup. This panel can be installed between fiber frames and at the end of a lineup.

Product Overview

Recommended applications	Medium to large fiber count applications or any space constrained applications. Highest fiber count solution available.
Description	High-density solution using 72-, 96-, 144- and 192-position blocks (FTB)
Number of fibers, future growth potential	Up to 29,177 in 17 frames using 144-position blocks, SC connectors and 1.7 mm patch cords Up to 32,939 in 15 frames using 192-position blocks, LC connectors and 1.7 mm patch cords
Interconnect	Good
Cross-connect	Excellent
Accommodates on-frame splicing	Good
Accommodates off-frame splicing	Excellent
Density – terminations per frame	1,728 terminations using standard connectors; 2,304 terminations using LC connectors
Front access to rear connector	Yes
VAM capabilities	Yes. Separate panel required
Slack storage location	On-frame (integrated jumper slack storage)
Connector access	Sliding adapter pack

NGF Optical Distribution Frame

Things to Consider When Ordering

Frame Capacity Requirements (Important Facts on Trough Space)

	144 FTB (1,728/frame)	96 FTB (1,152/frame)	72 FTB (864/frame)
NGF	12 frames	18 frames	24 frames
Front Facing NGF	4 frames	6 frames	8 frames

Calculation assumptions:

- Per Telecordia® GR-449-CORE, Issue 2 requirements
- 2.0 mm jumpers (maximum recommended diameter for all NGF products)
- 2" maximum jumper pile
- 50% of jumpers do not appear at any given place in lineup (50% rule)

Frame Lineup Capacity Comparisons

2.0 mm Jumpers/Maximum Recommended Diameter for NGF Products			
	NGF Frame: 1,728 Fiber Terminations	Conventional Frame: 1,152 Fiber Terminations	Conventional Frame: 648 Fiber Terminations
Horizontal trough space	30"	10" (5" Upper and Lower)	5" Lower
Maximum number of terminations allowed in a frame lineup before exceeding 2" pileup	21,081	8,240	4,120

NGF Frame Considerations

	NGF Frame	Front Facing NGF Frame	Slim Rack
Flexibility/ability to grow frame lineup	Yes	Yes	No
Interconnect	Supports	Supports	Supports
Cross-connect	Supports	Supports	Supports
On-frame splicing	Supports	Supports	Supports
Off-frame splicing	Supports	Supports	Supports
Rear access required	Yes	No	No
All front access	No	Yes	Yes
Footprint	30" Wide x 24" Deep	30" Wide x 19" Deep	19" Wide x 19" Deep
Horizontal trough space available	30"	9"	N/A

Block and Frame Termination Capacity

NGF Block Termination Capacity	NGF Frame Termination Capacity	Min/Max Patch Cord Diameter
72	864	2.0
96	1,152	2.0
144	1,728	2.0
192 (LC connectors only)	2,304	1.7

4/11 • 103742AE

NGF Optical Distribution Frame

Things to Consider When Ordering

Zoning Recommendations

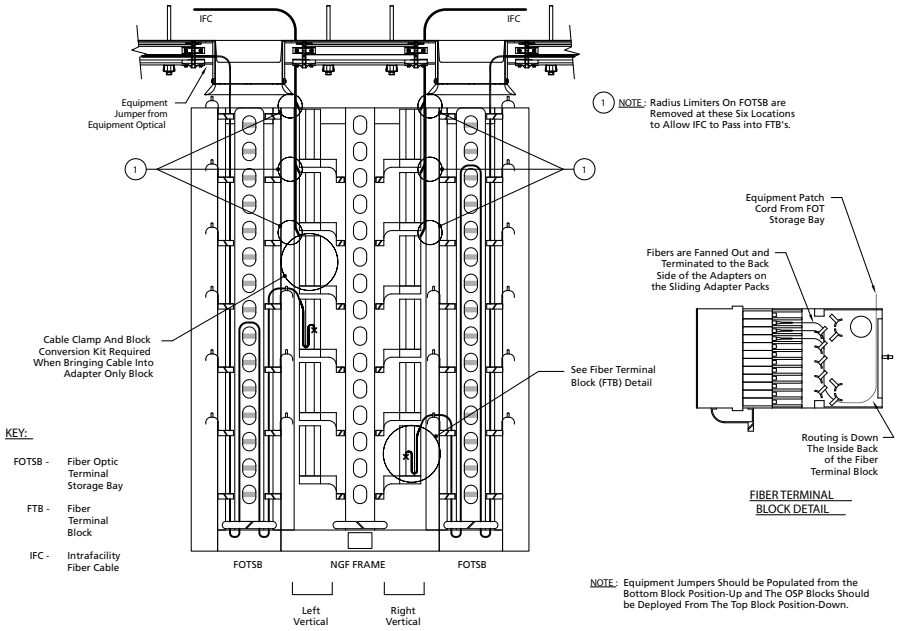

Routing Multi-Fiber Cable & Fiber Patch Cords Together Into NGF Vertical

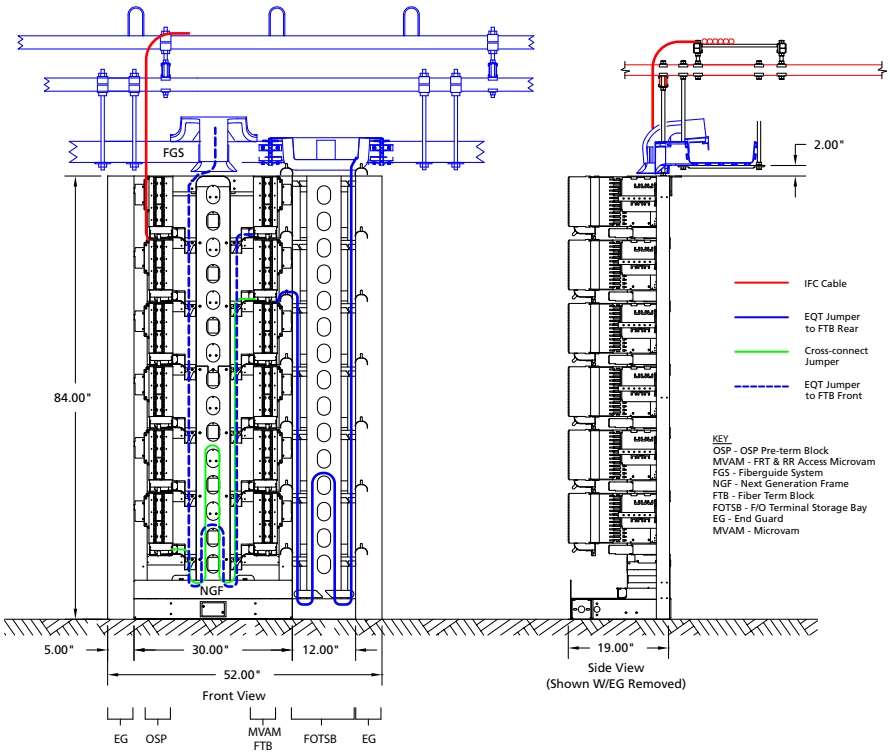

Front Facing NGF Application with Front and Rear Access MicroVAM Terminal Blocks

NGF Optical Distribution Frame

Things to Consider When Ordering

Zoning Recommendations

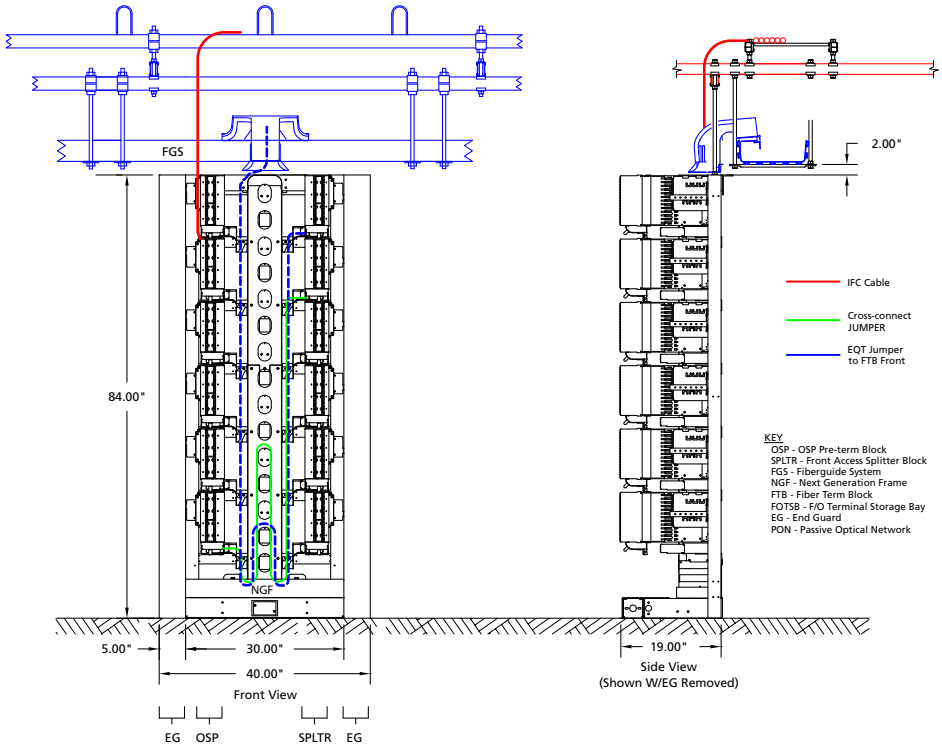

Front Facing NGF PON Splitter Block Application

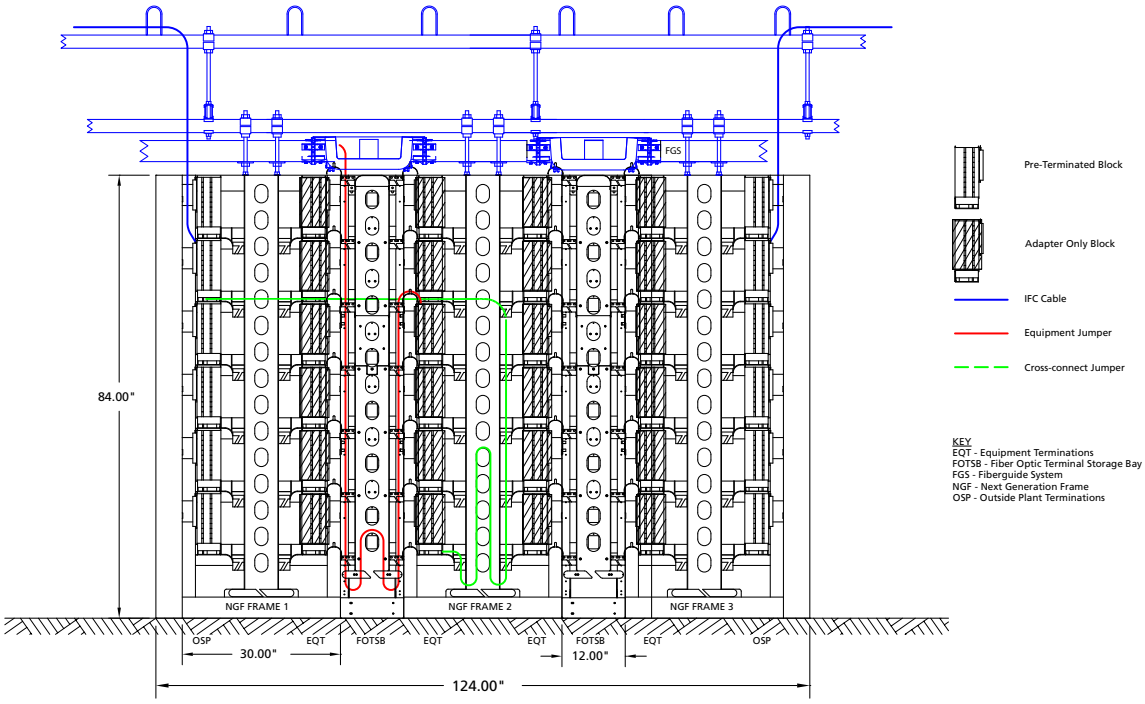

NGF Cross-Connect Application with Equipment Jumper Storage

NGF Optical Distribution Frame

Things to Consider When Ordering

How to Order

Main Components of the NGF	Catalog Number	Quantity
1) Select the desired Frame based on application		
- Fiber Main Distributing Frame - Page 10	_____	_____
- Front Facing Fiber Main Distributing Frame - Page 11	_____	_____
- Fiber Slim Rack - Page 12	_____	_____
2) Select the desired Fiber Termination Blocks		
- Preterminated Fiber Termination Blocks with Multifiber Cable-IFC - Pages 13-14	_____	_____
- Preterminated Fiber Termination Blocks with MPO Connectors - Page 15	_____	_____
- Adapter-Only Fiber Termination Blocks - Page 16	_____	_____
- Adapter-Only Fiber Termination Blocks-Conversion Kits - Page 17	_____	_____
- Fiber Combination Blocks - Pages 18-19	_____	_____
- Splice Tray - Page 20	_____	_____
- Splice Protector Sleeve - Page 20	_____	_____
3) Fiber Optic Terminal Jumper Storage Panel - Pages 22-24		
- 12" W (universal) - Page 24	_____	_____
- Front Facing 12" W (universal) - Page 24	_____	_____
- 8" W (left or right orientation) - Page 24	_____	_____
- Front Facing 8" W (left or right orientation) - Page 24	_____	_____
Optional Equipment		
4) MicroVAM Chassis - Page 21	_____	_____
5) Modular Splitter Block - Page 21	_____	_____
6) NGF to NG3 Frame Spacer Kit - Page 25	_____	_____
7) End Guard		
- End Guard (universal) - Page 26	_____	_____
- Front Facing End Guard (universal) - Page 26	_____	_____
8) Work Shelf - Page 26	_____	_____
9) Frame Extender - Page 27	_____	_____
10) Grounding Kit - Page 27	_____	_____
11) AC Outlet Kit - Page 27	_____	_____
12) Frame Installation Kit - Page 28	_____	_____
13) Isolation Pad - Page 28	_____	_____
14) Cable Clamp Kit - Page 29	_____	_____
15) Sliding Adapter Pack - Page 30	_____	_____
16) Patch Cord - Pages 103-107	_____	_____
17) In-Line Attenuator - Page 108	_____	_____

*See page 31 for standard cross-connect patch cord lengths.

4/11 • 1037742AE

NGF Optical Distribution Frame

Fiber Main Distributing Frame

The zone 4 rated fiber main distributing frame (FMDF) is the cornerstone of the NGF product line. The footprint of the frame is GR-449-CORE, Issue 2 compliant. This innovative frame has six 5-inch horizontal troughs for a total of 30 inches of horizontal trough space. This abundant trough space minimizes fiber pile up and congestion leading to easier jumper traceability and removal. The frame has 12 fiber termination block (FTB) mounting positions equally divided between vertical columns on the left and right sides of the frame as shown in the figure below. The frame provides sufficient vertical trough space for the highest termination density applications and includes built-in jumper storage that will store up to 3.5 meters of jumper slack. The NGF is designed such that only a single jumper length (6 meters) is required to go between any two termination points within a frame.

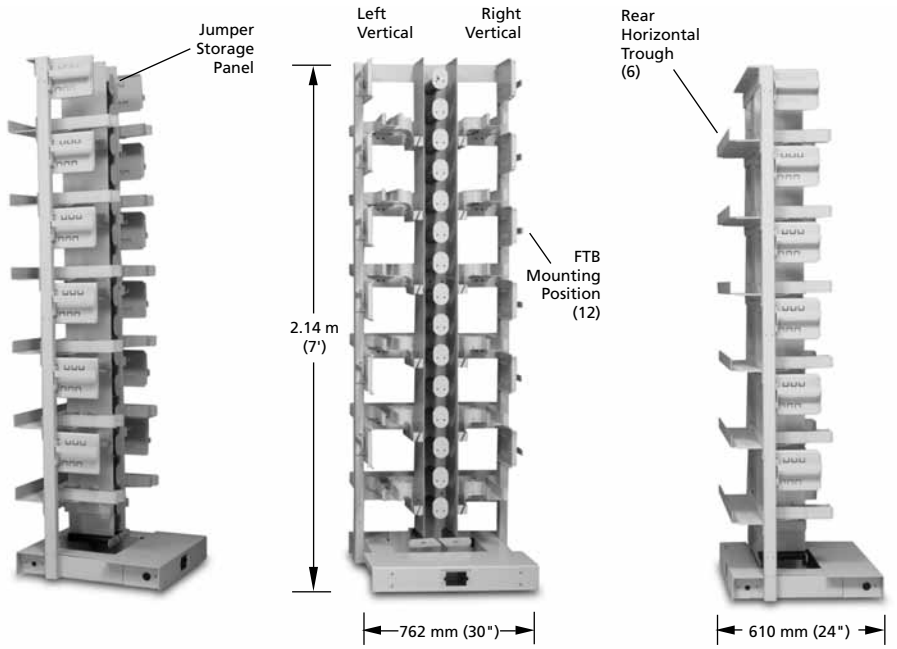

Front ISO View **Front View** **Side View**

Ordering Information

Description	Dimensions (HxWxD)	Maximum Termination Capacity	Catalog Number
NGF fiber main distributing frame	2.14 m x 762 mm x 610 mm (7' x 30" x 24")	1,728 (2,304 using LC connectors)	NGF-MDF7A100-30

Each frame section includes heavy duty floor anchor bolts for concrete floor applications. See page 28 for additional mounting options.

4/11 • 103742AE

NGF Optical Distribution Frame

Front Facing Fiber Main Distributing Frame

The zone 4 rated front facing fiber main distributing frame (F3MDF) is designed for single-sided access applications and may be mounted up against a wall or back-to-back to save floor space. Unlike the FMDF, the more compact F3MDF is equipped with a single 9-inch horizontal trough on the front. The F3MDF has 12 fiber termination block (FTB) mounting positions equally divided between vertical columns on the left and right sides of the frame as shown below. The frame provides sufficient vertical trough space for the highest termination density applications and includes built-in jumper storage that will store up to 3.5 meters of jumper slack.

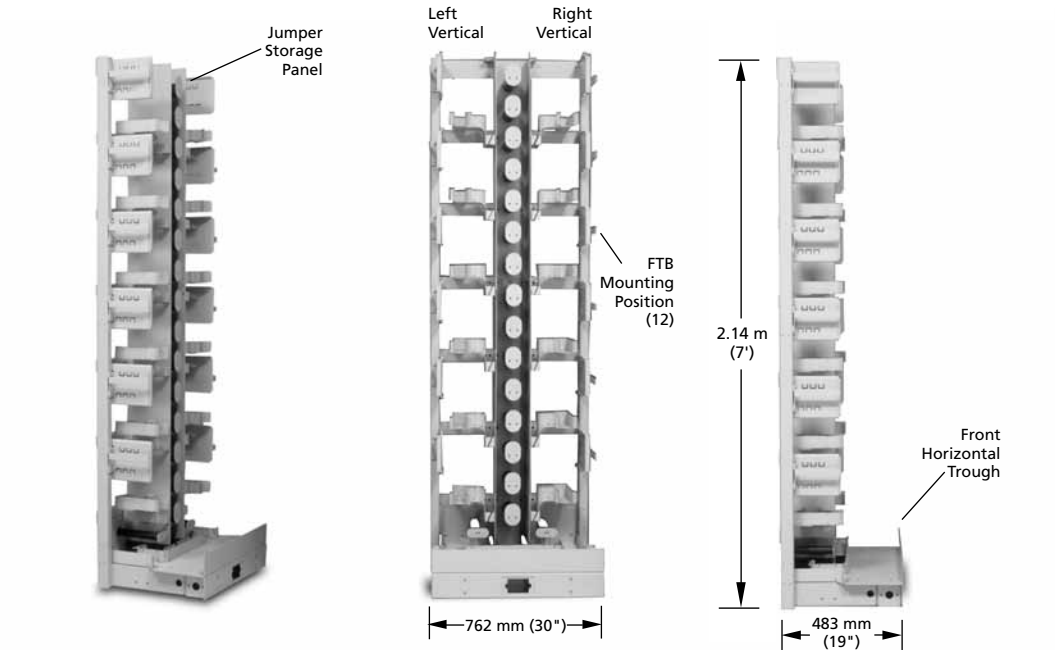

Front ISO View **Front View** **Side View**

Ordering Information

Description	Dimensions (HxWxD)	Maximum Termination Capacity	Catalog Number
NGF front facing fiber main distributing frame	2.14 m x 762 mm x 483 mm (7' x 30" x 19")	1,728 (2,304 using LC connectors)	NGF-F3MDF7A100-30

Each frame section includes heavy duty floor anchor bolts for concrete floor applications. See page 28 for additional mounting options.

4/11 • 103742AE

NGF Optical Distribution Frame

Fiber Slim Rack

The fiber slim rack is designed for lower density applications than the FMDF or F3MDF. It has six fiber termination block (FTB) mounting positions and is designed for single-sided access applications. The slim rack is intended for use in a single frame application and should not be used in a multi-frame lineup. The built-in jumper storage panel will store up to 3.5 meters of jumper slack.

When ordering FTBs for the slim rack, note that only LEFT oriented blocks are used on this frame.

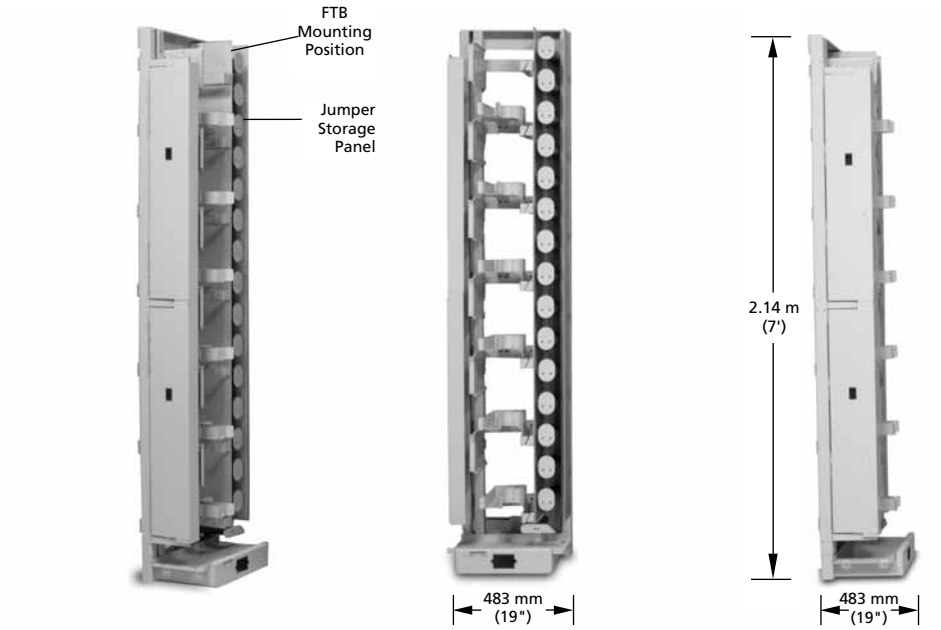

Front ISO View | **Front View** (shown with covers open) | **Side View**

Ordering Information

Description	Dimensions (HxWxD)	Maximum Termination Capacity	Catalog Number
NGF fiber slim rack	2.14 m x 483 mm x 483 mm (7' x 19" x 19")	864 (1,152 using LC connectors)	NGF-SLM7A100

Each frame section includes heavy duty anchor bolts for concrete floor applications.
Not rated for zone 4 applications. See page 28 for additional mounting options.

NGF Optical Distribution Frame

Preterminated Fiber Termination Blocks with Multifiber Cable – IFC

Preterminated fiber termination blocks (FTBs) are available with either indoor or outdoor rated cable in ribbon or stranded configurations. All blocks are 100% factory tested to guarantee continuity and reliable connections. Preterminated FTBs make installation quick and easy, reducing labor costs. Before ordering, determine the block orientation and cable exit direction. Preterminated FTBs may be ordered with a "left" orientation (mounts on the left side of the frame) or a "right" orientation (mounts on the right side of the frame). The cable exit direction will be either "upward" (cables terminated to the rear side of the block exit up toward the top of the frame) or "downward" (cables terminated to the rear side of the block exit down toward the bottom of the frame).

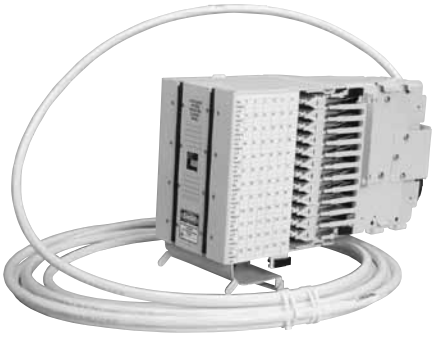

Preterminated FTB with IFC

Definition of Variables	
1	**Block Type** General adapter type required in the FTB
2	**Block Capacity** Maximum number of terminations that the FTB will accommodate when fully loaded
3	**Block Orientation** Vertical column of the frame the FTB is to be mounted on
4	**Cable Exit Direction** Direction the equipment jumpers or OSP cable will exit from the FTB
5	**Connector and Adapter Type #1** Specific adapter/connector type required at the FTB
6	**Connector Type #2** Specific connector type required at the far end opposite the FTB
7	**Cable Type** Type of cable to be terminated to the FTB
8	**Cable Length** Required length of the cable terminated to the FTB

Ordering information follows on next page.

NGF Optical Distribution Frame

Preterminated Fiber Termination Blocks with Multifiber Cable-IFC

Catalog Number

NGF-TB _ _ _ _ _ _ _ _ _ _ _ _

1 Block Type

1	SC
2	FC
4	LC

2 Block Capacity

B	72
C	96
M	144[1]
Q	192 (LC only)[1, 3]

3 Block Orientation

L	Left
R	Right

4 Cable Exit Direction

U	Upward
D	Downward

5 Connector and Adapter Type #1

Singlemode	
7	SC ultra polish
L	SC angled polish
2	FC ultra polish
K	LC ultra polish (144 and 192 only)
M	LC angled polish (144 and 192 only)
Multimode (50/125 µm) Aqua[5]	
T	SC
C	LC (144 or 192 only)

6 Connector Type #2

Singlemode	
0	No connector/stub end
7	SC ultra polish
L	SC angled polish
2	FC ultra polish
K	LC ultra polish
M	LC angled polish
Multimode (50/125 µm) Aqua[5]	
0	No connector/stub end
T	SC
C	LC

Other configurations are available upon request. Please contact ADC Technical Assistance Center.

8 Cable Length

Standard Single-Ended	
016	16 m (50')
023	23 m (75')
031	31 m (100')
046	46 m (150')
061	61 m (200')
077	77 m (250')
092	92 m (300')
122	122 m (400')
153	153 m (500')
Non-Standard	
Use XXX for non-standard length in meters	

7 Cable Type (IFC Riser)[2]

Singlemode	
ZB	72-fiber stranded
KA	72-fiber ribbon[4]
ZC	96-fiber stranded
EG	96-fiber ribbon[4]
ZD	144-fiber stranded
FJ	144-fiber ribbon[4]
GT	192-fiber stranded (2 x 96)
EJ	192-fiber ribbon (2 x 96)[4]
Multimode (50/125 µm) LOMMF 300 m	
WE	96-fiber stranded
WG	144-fiber stranded
TF	192-fiber stranded (2 x 96)

[1] 192 and 144 blocks using block type 1 or 2 **cannot** be used in legacy 26" wide NGF frames.

[2] Panels using ADC's standard cable offering have a shorter lead time than panels using a specific cable manufacturer. ADC provides GR-409 compliant cable that meets or exceeds our high quality standards. Standard cable offering above will use Corning SMF28-e, Sumitomo, Alcatel or similar singlemode fiber based on current market availability.

[3] Due to space limitations, do not use Tracerlight® patch cords in the 192 block.

[4] See Pages 97-98 to configure breakout kits for configurations using stubbed IFC ribbon cable.

[5] It is standard practice to use aqua colored adapters with laser optimized multimode fiber for identification of 10 Gigabit circuits

See previous page for definition of variables.

NGF Optical Distribution Frame

Preterminated Fiber Termination Blocks with MPO Connectors

Fiber termination blocks (FTBs) with MPO connectors provide MPO connectability on the rear of the block for easy connection of MPO fiber cables. The termination portion of the fiber block utilizes sliding adapter packs to gain easy access to standard connectors and adapters on the front of the block and provides a location for standard patch cord connections. The block is internally cabled at the factory for easy installation and occupies one position of the frame. Before ordering, determine the block orientation needed as the blocks may be ordered with a "left" orientation (mounts on the left side of the frame) or a "right" orientation (mounts on the right side of the frame).

Preterminated FTB with MPO Connectors

Definition of Variables	
1	**Block Capacity** Maximum number of terminations that the FTB will accommodate when fully loaded
2	**Block Orientation** Vertical column of the frame the FTB is to be mounted on
3	**Front Connector and Adapter Type** Specific adapter/connector type required at the FTB
4	**Pigtail Type** Type of pigtail used within the FTB
5	**Number of Pigtail Assemblies** Number of pigtails to be pre-installed in the FTB

Catalog Number
NGF-MP __ __ 0 __ __ __

1 Block Capacity

C	96
M	144[1]
Q	192 (LC only)[1, 2]

2 Block Orientation

L	Left
R	Right

3 Front Connector and Adapter Type

Singlemode	
7	SC ultra polish
L	SC angled polish
2	FC ultra polish
K	LC ultra polish (144 or 192 only)
M	LC angled polish (144 or 192 only)
Multimode (50/125 µm) Aqua	
T	SC
C	LC (144 or 192 only)

5 Number of Pigtail Assemblies

08	Used with 96-position block
12	Used with 144-position block
16	Used with 192-position block

4 Pigtail Type

1	50/125 µm (OM3) LOMMF[3]
5	Singlemode

[1] 192 and144 blocks **cannot** be used in legacy 26" wide NGF frames.

[2] Due to space limitations, do not use Tracerlight® patch cords in the 192 block.

[3] LOMMF – Laser optimized multimode fiber.

For multimode cable options, refer to literature# 103472AE.
For multimode cable options, refer to the TrueNet Solutions literature# 102094AE.
Other configurations are available upon request. Please contact ADC Technical Assistance Center.
For underfloor applications, an FOTSB (pg 24) must be used.

NGF Optical Distribution Frame

Adapter-Only Fiber Termination Blocks

Fiber termination blocks (FTBs) without fiber can be ordered fully loaded with adapters. Before ordering, determine the block orientation and cable exit direction. Adapter-only FTBs may be ordered with a "left" orientation (mounts on the left side of the frame) or a "right" orientation (mounts on the right side of the frame). The cable exit direction will be either "upward"* (cables terminated to the rear side of the block exit up toward the top of the frame) or "downward" (cables terminated to the rear side of the block exit down toward the bottom of the frame). All blocks with adapters only are configured to terminate single or dual jumpers on the rear of the block. If a multifiber breakout style cable (i.e., OSP/IFC) is to be terminated to the rear of the block, a separate clamping kit and replacement rear storage area kit is required (see page 17).

*** When using the fiber optic terminal jumper storage panels from page 24, a cable exit UP block must be used.**

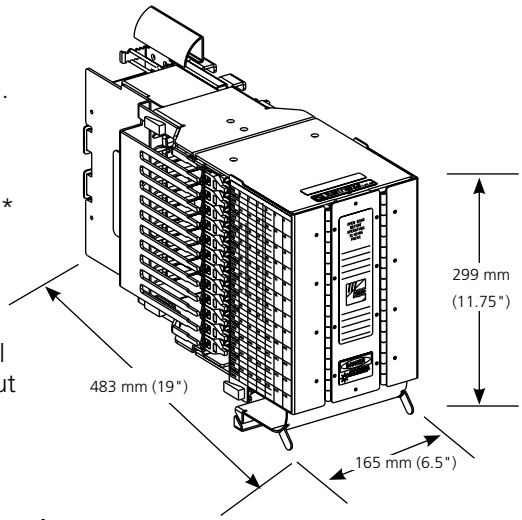

144-Position Right Upward FTB

Definition of Variables	
1	**Block Type** General adapter type required in the FTB
2	**Block Capacity** Maximum number of terminations that the FTB will accommodate when fully loaded
3	**Block Orientation** Vertical column of the frame the FTB is to be mounted on
4	**Cable Exit Direction** Direction the equipment jumpers or OSP cable will exit from the FTB
5	**Adapter Type** Specific adapter type required in the FTB

Catalog Number
NGF-TB _ _ _ _ _

1 Block Type

1	SC
2	FC
4	LC

2 Block Capacity

B	72
C	96
M	144[1]
Q	192 (LC only)[1, 2]

3 Block Orientation

L	Left
R	Right

4 Cable Exit Direction

U	Upward
D	Downward

5 Adapter Type

Singlemode	
7	SC ultra polish
L	SC angled polish
2	FC ultra polish
K	LC ultra polish (144 or 192 only)
M	LC angled polish (144 or 192 only)
Multimode (50/125 µm) Aqua	
T	SC
C	LC (144 or 192 only)

[1] 192 and 144 blocks using block type 1 or 2 **cannot** be used in legacy 26" wide NGF frames.

[2] Due to space limitations, do not use Tracerlight® patch cords in the 192 block.

Other configurations are available upon request. Please contact ADC Technical Assistance Center.

NGF Optical Distribution Frame

Adapter-Only Fiber Termination Blocks – Conversion Kits

Cable Clamping Kit and Block Conversion Kit

Adapter-only blocks ordered from page 16 are configured to accommodate single fiber jumpers or multifiber breakout cables. Additional hardware is required if loading a preterminated intrafacility cable (IFC) or OSP cable. Block conversion kits are available to convert adapter-only blocks to blocks that will accept preterminated IFC or OSP style cables. The conversion kits contain the cable management hardware, brackets and cable clamps required to convert the block. The kit required will depend on the block style originally purchased.

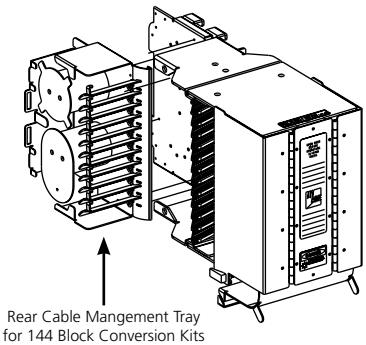

144-Position Right FTB
(Shown with IFC Conversion Kit Loaded)

Ordering Information

Description	Catalog Number
Block type originally purchased	
72-position blocks	NGF-ACCOSPKIT02
96-position blocks with rear cable management; (Ordered before June 2002)	NGF-ACCOSPKIT01
96-, 144-, or 192-position **Left Up** blocks	NGF-ACCRCMSLU
96-, 144-, or 192-position **Right Up** blocks	NGF-ACCRCMSRU
96-, 144-, or 192-position **Left Down** blocks	NGF-ACCRCMSLD
96-, 144-, or 192-position **Right Down** blocks	NGF-ACCRCMSRD

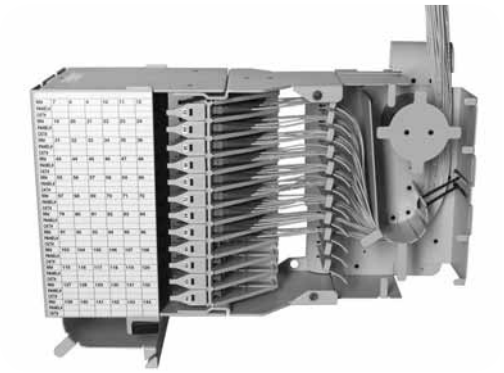

144-Position FTB Loaded
with Jumpers

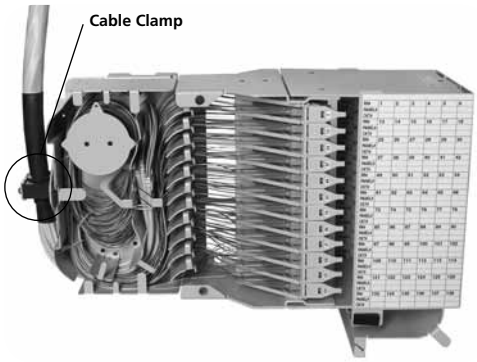

144-Position FTB Loaded with Multifiber Breakout Cable

NGF Optical Distribution Frame

Fiber Combination Blocks

Fiber combination blocks (FCB) provide the option to splice IFC/OSP cables on the frame with factory-installed fiber pigtails. The blocks are available with several different adapter types in block configurations of 72-, 96- or 144-positions. Also, a 192-position FCB is available using LC adapters. The termination portion of the fiber combination block utilizes sliding adapter packs to gain easy access to connectors on both the front and rear side of the block. The block is available with factory-installed pigtails for easy installation. Splice trays are shipped with the block if ordered with pigtails; otherwise trays must be ordered separately. The block is shipped with a cable clamp for OSP/IFC. The FCB occupies two mounting positions on a frame section. Before ordering, determine the block orientation. FCBs may be ordered with a "left" orientation (mounts on the left side of the frame) or a "right" orientation (mounts on the right side of the frame).

Fiber Termination/Splice Block

Ordering information follows on next page.

NGF Optical Distribution Frame

Fiber Combination Blocks

Definition of Variables	
1	**Block Type** General adapter type required in the FCB
2	**Block Capacity** Maximum number of terminations that the FCB will accommodate when fully loaded
3	**Block Orientation** Vertical column of the frame the FCB is to be mounted on
4	**Connector and Adapter Type** Specific adapter/connector type required in the FCB
5	**Pigtail Type** Type of pigtail required
6	**Number of Pigtail Assemblies** Number of pigtails to be pre-installed in the FCB
7	**Splice Chip** Type of splice chip required for splice trays

Catalog Number

NGF-CB _ _ _ 2 _ _ _ _ _ _

1 Block Type

1	SC
2	FC
4	LC

2 Block Capacity

B	72
C	96
M	144 [1, 2]
Q	192 (LC only) [1, 2, 3]

3 Block Orientation

L	Left
R	Right

4 Connector and Adapter Type

Singlemode	
7	SC ultra polish
L	SC angled polish
2	FC ultra polish
K	LC ultra polish (144 and 192 only)
M	LC angled polish (144 and 192 only)
Multimode (50/125 µm) Aqua	
T	SC
C	LC (144 or 192 only)

5 Pigtail Type

1	12-fiber stranded
5	12-fiber ribbon[4]

6 Number of Pigtail Assemblies

06	72-position panel
08	96-position panel
12	144-position panel
16	192-position panel

7 Splice Chip

3	Mechanical (mass fusion)
6	Nortel QPAK (24-fiber heat shrink fusion)

[1] 192 and 144 blocks using block style 1 or 2 **cannot** be used in legacy 26" wide NGF frames.
[2] Must use Nortel QPAK splice chip in 144 and 192 blocks when splicing 24 single fibers.
[3] Due to space limitations, do not use Tracerlight® patch cords in the 192 block.
[4] Only available in singlemode.

Other configurations are available upon request. Please contact ADC Technical Assistance Center.

4/11 • 103742AE

NGF Optical Distribution Frame

Fiber Combination Block Accessories

Splice Tray

For use when splice trays are not included with block at time of order.

Catalog Number

FST-DRS ___ - ___

1	**Number of Splices**
12	12 splices
24	24 splices

2	**Splice Tray Type**
FT	Bare fusion
HS	Heat shrink (single fiber fusion)
MT	Mechanical (mass fusion)

[1] Available in 24-position

Splice Protector Sleeve

The splice protector sleeve is constructed to protect a splice post fusion. It is made from heat shrinkable material and contains a built-in strength member for physical protection of the fusion splice. The splice protection sleeve is placed on the fiber before making a splice, moved over the splice when the splice fusion is complete and shrunk into place. They are available in either single fiber or mass fusion sleeves.

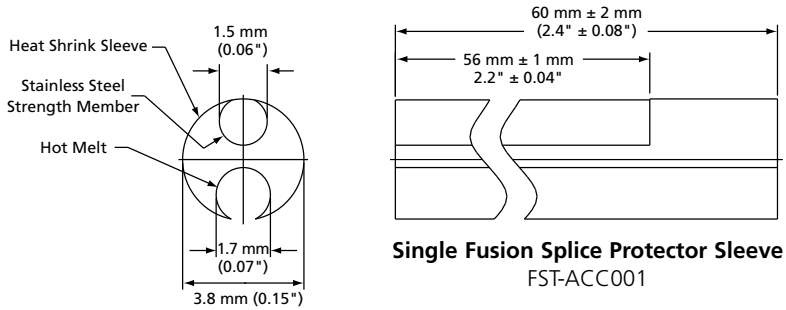

Single Fusion Splice Protector Sleeve
FST-ACC001

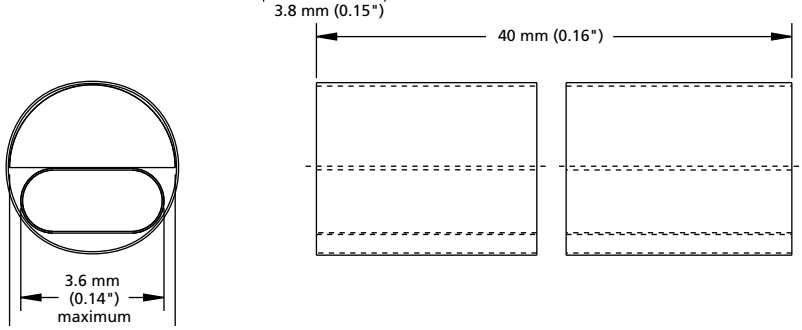

Mass Fusion Splice Protector Sleeve
FST-ACC006

Ordering Information

Description	Catalog Number
Splice protector sleeve for;	
Single fiber – single fusion; 60 mm (2.4") length, 1 each	FST-ACC001
Single fiber – single fusion; 40 mm (1.6") length, 1 each	FST-ACC005
12-fiber ribbon – mass fusion – heat shrink; 40 mm (1.6") length, 1 each	FST-ACC006

Other configurations are available upon request. Please contact ADC Technical Assistance Center.

NGF Optical Distribution Frame

Value-Added Module (VAM) MicroVAM Chassis

The new NGF MicroVAM chassis is designed to mount on all standard NGF frames and is interchangeable with termination, splice, and storage modules. Each chassis accommodates up to 12 MicroVAM modules. The NGF MicroVAM chassis accommodates MicroVAM modules only. **For information on ADC legacy MiniVAM chassis and modules, please contact ADC Technical Assistance Center.**

MicroVAM Chassis - Left Orientation
(Shown Loaded)

Ordering Information

Description	Dimensions (HxWxD)	Catalog Number
NGF MicroVAM chassis, unloaded - left orientation; accommodates 12 MicroVAM modules	300 mm x 455 mm x 132 mm (11.8" x 17.9" x 5.2")	NGF-VSPM-7000L
NGF MicroVAM chassis, unloaded - right orientation; accommodates 12 MicroVAM modules	300 mm x 455 mm x 132 mm (11.8" x 17.9" x 5.2")	NGF-VSPM-7000R

Value-Added Module (VAM) System

ADC offers an expansive line of monitor, splitter, WDM and CWDM VAM plug-in modules designed to meet all application needs. Please reference the **Value-Added Module (VAM) System Catalog #101663AE** for details at www.adc.com or contact ADC Customer Service.

NGF Modular Splitter Block and Outside Plant Splitter System

For modular splitter block solutions for NGF frames and Outside Plant Splitter Solutions, please reference **OmniReach® FTTX Solutions – Passive Optical Splitter Modules Catalog #102902AE** at www.adc.com or contact ADC Customer Service.

Fiber Optic Terminal Jumper Storage Panel

The fiber optic terminal jumper storage panel is an optional filler panel that provides up to 5 meters (16.4 feet) of slack storage for jumpers that run between terminal equipment and the rear ports of an NGF terminal block in cross-connect applications. This slack storage capability allows for greater flexibility in determining jumper lengths and allows for use of more standard length jumpers. This panel is installed within the NGF frame lineup between NGF frames. The fiber optic terminal storage panels are available in two different configurations depending on the way the NGF frame system is zoned. NGF frames can be zoned by vertical or by frame. A 12-inch wide panel is available that serves two verticals (one on each side) for use when frames are zoned by vertical. Also, 8-inch wide versions are available that serve a single vertical (left or right) for use when frames are zoned by frame.

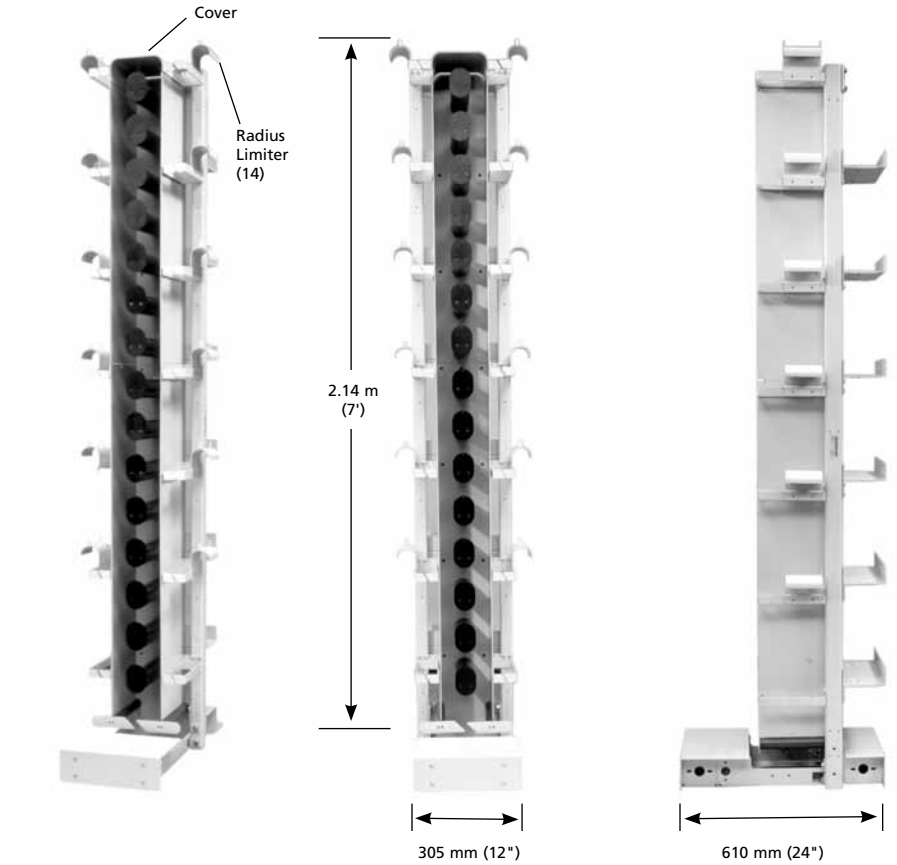

Front ISO View | **Front View** (NGF-ACCFOTSB Shown) | **Side View**

Ordering information follows on page 24.

Fiber Optic Terminal Jumper Storage Panel Zoning Recommendations

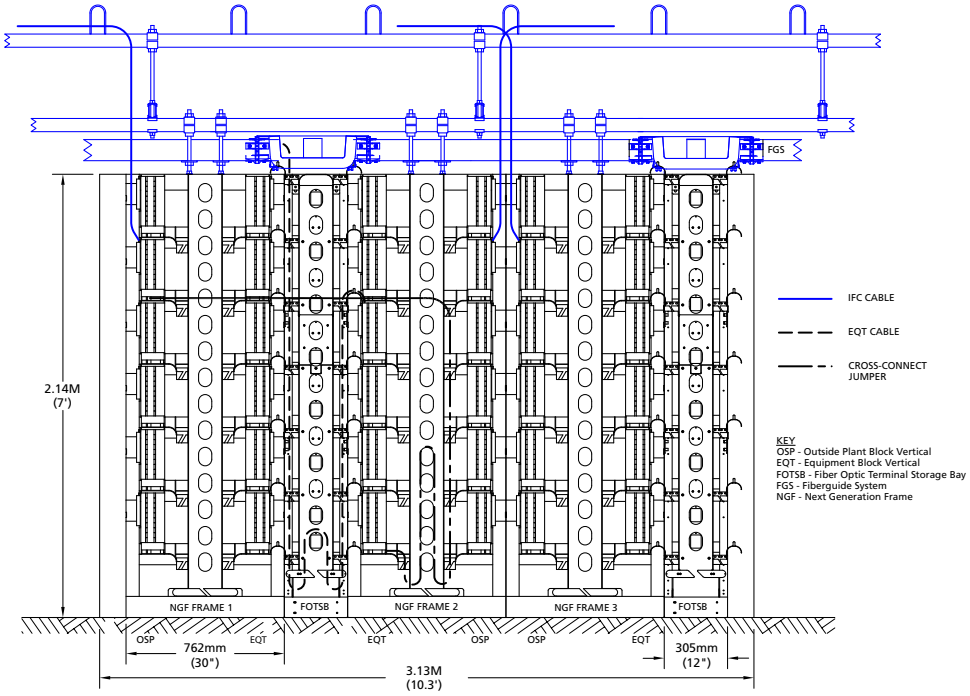

NGF Cross-Connect Zoned by Vertical
1:1 Equation to OSP Ratio

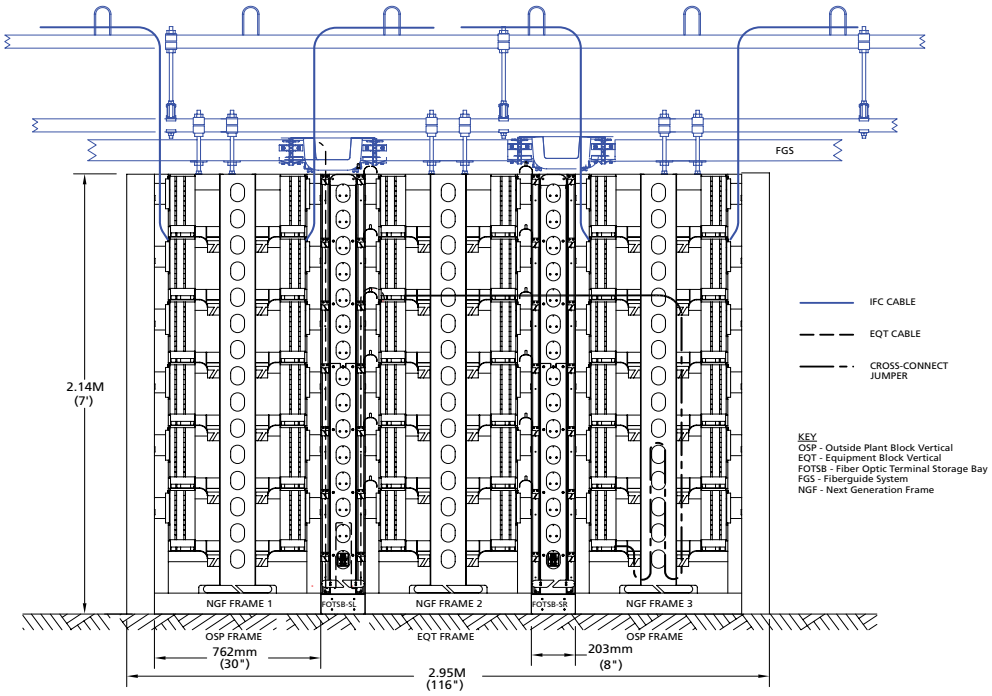

NGF Cross-Connect Zoned by Frame
2:1 Equation to OSP Ratio

Fiber Optic Terminal Jumper Storage Panel

Ordering Information

Description	Dimensions (HxWxD)	Catalog Number
Frame zoning: by vertical, 305 mm (12")		
FMDF	2.14 m x 305 mm x 610 mm (7' x 12" x 24")	NGF-ACCFOTSB
Front facing F3MDF	2.14 m x 305 mm x 483 mm (7' x 12" x 19")	NGF-F3ACCFOTSB
Frame zoning: by frame, 203 mm (8")		
FMDF left vertical	2.14 m x 203 mm x 610 mm (7' x 8" x 24")	NGF-ACCFOTSB-SL
FMDF right vertical	2.14 m x 203 mm x 610 mm (7' x 8" x 24")	NGF-ACCFOTSB-SR
Front facing F3MDF left vertical	2.14 m x 203 mm x 483 mm (7' x 8" x 19")	NGF-F3ACCFOTSB-SL
Front facing F3MDF right vertical	2.14 m x 203 mm x 483 mm (7' x 8" x 19")	NGF-F3ACCFOTSB-SR

4/11 • 103742AE

NGF to NG3® Frame Spacer Kit

The 2.5-inch wide frame spacer kit is required for transition between next generation frames (NGFs) and NG3 frames. The kit includes six rear trough adapters that ensure the rear cable management features of both fiber frames are utilized. Tie brackets and a kick plate are also included for a secure installation. For technical documents outlining the proper procedure for making these transitions, please contact your ADC sales representative.

Ordering Information

Description	Catalog Number
Mounts on left side of NGF frame and **right side of NG3 frame**	NG3-NGFTRNTWN7A0R
Mounts on right side of NGF frame and **left side of NG3 frame**	NG3-NGFTRNTWN7A0L

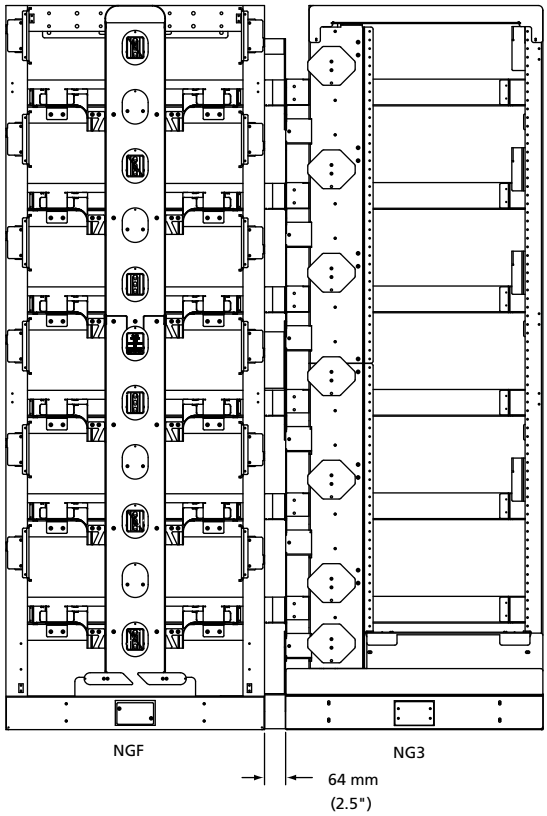

Frame Spacer Kit
(NG3-NGFTRNTWN7A0L Shown)

End Guard

End guards provide protection for the fibers entering and exiting frames at the end of a lineup. They are designed for universal fit to be used on either end of the lineup.

Ordering Information

Description	Dimensions (HxWxD)	Catalog Number
FMDF end guard	2.14 m x 127 mm x 610 mm (7' x 5" x 24")	NGF-ACCEGD007
Front facing F3MDF end guard	2.14 m x 127 mm x 483 mm (7' x 5" x 19")	NGF-F3ACCEGD007

Work Shelf

The work shelf can mount at any one of six positions within the 30-inch NGF frame and anywhere along the height of the frame. It provides a surface for miscellaneous objects (i.e. isopropyl alcohol, tissues and cotton swabs for cleaning connectors); also provides a writing surface; or serves as an aid in field terminating cables and jumpers.

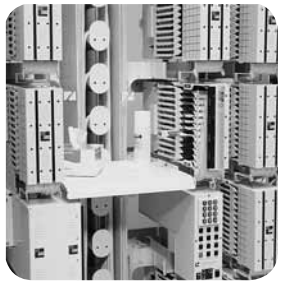

Ordering Information

Description	Catalog Number
Work shelf; 762 mm (30")	NGF-ACCSHELF1-30

NGF Optical Distribution Frame

Frame Accessories

Frame Extender

Frame extenders are used to extend the height of a 7-foot frame to the appropriate ceiling height so that it can be secured overhead.

Ordering Information

Description	Catalog Number	
Frame extender	**762 mm (30") Wide Frames**	**Slim Rack**
305 mm (12")	NGF-ACCEXT12-30	NGF-ACCEXTSLM12
610 mm (24")	NGF-ACCEXT24-30	NGF-ACCEXT24-SR
1.4 m (54")	NGF-ACCEXT54-30	NGF-ACCEXT54-SR

Grounding Kit

The fiber distribution frame is equipped with a grounding kit designed with mechanical fittings including clamps, straps and connectors. Order this kit only if you are building a frame using your own frame. When connecting frame ground to office ground conductor, an H-TAP bonding kit should also be ordered.

Grounding kit includes:

2 hole terminal lug	1 each
#6 AWG copper tinned wire	13'
Wire clips	8 each
#12-24 x 1/2" screws	10 each

H-TAP bonding kit includes:

H-TAP	1 each
H-TAP insulated cover	1 each
2 hole terminal lug, crimp	3 each
Terminal lug, screw	4 each
#6 AWG stranded insulated wire	2'
Star washer	6 each
No-ox grease	1 tube

Ordering Information

Description	Catalog Number
Grounding kit	E-501-L37*
H-TAP bonding kit	E-501-L166

*Included with all NGF frames

AC Outlet Kit

The AC outlet kit provides the hardware for mounting AC power outlets on the frame. Each kit includes a prewired AC power outlet strip that mounts at the bottom of the frame.

Ordering Information

Description	Catalog Number
Dual outlet; mounts in base of NGF	ACOK-2
AC outlet cover kit	RAC-0X0493

NGF Optical Distribution Frame

Frame Accessories

Frame Installation Kit

Frame installation kits may be used on network frames and are seismic zone 4 rated.

Computer floor kit includes:

Threaded rods	4 each, 5/8" – 11" x 30"
Heavy nuts, locks and flat washers	12 each
Nuts with springs	4 each, 1/2" x 30" and shoulder washers
Unistrut and anchor kit	1 each, 10'

Overhead support kit includes:

Designation card holder	1 each
Two-bar channel	4 each
Framing clip with 0.56	4 each
Framing clip with 0.69	4 each
Clip J-bolt	4 each, 1/2" – 13" x 18" long
Threaded rod	2 each, 5/8" x 18" long
Hex nut	4 each, 1/2" x 13"
Hex nut	4 each, 5/8" x 11"

Ordering Information

Description	Catalog Number
Frame installation kit for	
Computer floor	FDF-ACC146
Overhead support	RINST-TOP7

Isolation Pad

A template for frame installation providing isolation between the frame and the ground.

Ordering Information

Description	Catalog Number
Isolation pad for	
NGF FMDF and equipment frames	NGF-ACCISOP30X24
NGF front facing F3MDF and equipment frames	NGF-ACCISOP30X19
NGF slim racks	NGF-ACCISOP19X19
8" W NGF-F3ACCFOTSB-SL and NGF3ACCFOTSB-SR	NGF-ACCISOP8X19
8"W NGF-ACCFOTSB-SL and NGF-ACCFOTSB-SR	NGF-ACCISOP8X24
NGF-ACCFOTSB storage panels	NGF-ACCISOPFS12X24
NGF-F3ACCFOTSB storage panels	NGF-ACCISOPFS12X19
End guards for 610 mm (24") deep FMDF frames	NGF-ACCISOPEG24
End guards for 483 mm (19") deep F3MDF frames	NGF-ACCISOPEG19

Cable Clamp Kit

Cable clamp kits are available for securing IFC/OSP cable or equipment (FOT) jumpers on the rear of the FTB. Each FTB has three cable clamp mounting positions.

Cable clamp kit for FOT patch cord includes:

Cable clamp bracket	1 each
O-ring	1 each
Screws	2 each

Cable clamp kit for IFC/OSP cables includes:

Clamp cover	1 each
Clamps	2 each
0.5" Grommet (inner diameter)	1 each
0.6" Grommet (inner diameter)	1 each
0.7" Grommet (inner diameter)	1 each
#14 - #6 AWG split bolt	1 each
Shield bonding connector	1 each
1-foot lead wire	1 each
#6 AWG ring terminal lug	1 each
Clamp cover plate	1 each

Ordering Information

Description	Catalog Number
Cable clamp kit for FOT patch cords (included with fiber termination blocks loaded with adapters only)	NGF-ACCCLMP04
Cable clamp kit* for IFC/OSP cables, dielectric cable without grounding hardware (included with fiber termination blocks with IFC)	NGF-ACCCLMP08

* One NGF-ACCCLMP08 is also included with each cable clamp kit and block conversion kit (see page 17).

4/11 • 103742AE

NGF Optical Distribution Frame

Panel Accessories

Sliding Adapter Pack

Sliding adapter packs house groups of fiber optic adapters and are mounted in fiber termination blocks to provide easy access to connectors. Sliding adapter packs are available with SC, FC and LC adapters. The adapters come in packs of two, four, six and eight depending on the adapter type and the desired termination density. See table below for configuration guidelines.

Sliding Adapter Pack Configuration Guidelines

Block Capacity	Adapter Type	Adapter Pack Configuration	Adapter Pack Type
72-position	SC	2 pack / 4 pack	A
72-position	FC	6 pack	E
96-position	SC, FC	4 pack / 4 pack	J
144-position (block code 'M')	SC, FC, LC	6 pack / 6 pack	K
192-position (block code 'Q')	LC	8 pack / 8 pack	J

Catalog Number

NGF-SAP __ 0 __ 00

Adapter Type

Singlemode	
7	SC ultra polish
L	SC angled polish
2	FC ultra polish
K	LC ultra polish (192 and 144 only)
M	LC angled polish (192 and 144 only)
Multimode (50/125 µm) Aqua	
T	SC
C	LC

Adapter Pack Type

A	2 pack / 4 pack
E	6 pack
J	4 pack / 4 pack[1]
K	6 pack / 6 pack (all block code "M" blocks)

[1] 8 pack / 8 pack with LC configuration.

Other configurations are available upon request. Please contact ADC Technical Assistance Center.

Standard Cross-Connect Patch Cord Lengths

Total Number of Sections Traversed*	Approximate Patch Cord Length Meters (Feet)
Same frame	6 m (18')
Adjacent frames	7 m (23')
3 to 4	8 m (26')
5 to 6	10 m (33')
7 to 8	11 m (36')
9 to 10	12 m (39')

*Depending on office requirements, 11 or more frame sections may require the use of interbay tie panels.
For additional information, please call ADC Technical Assistance Center, 1-800-366-3891.
For recommended cross-connect method and installation instructions, refer to User Manual ADCP-90-285.

Ordering Information for Patch Cords and Attenuators

ADC offers a comprehensive line of cable assembly and accessory products including patch cords, IFC assemblies, attenuators, FasTerm® connectors and adapters to meet the demanding needs of today's network. Please refer to the **Fiber Cable Assemblies Catalog #102880AE** at www.adc.com for more detailed information. For your convenience, ordering information for patch cords and attenuators can also be found on pages 103-108

NG3® Optical Distribution Frame

Introduction

Frames

ADC's NG3® product line is Telcordia® GR-449-CORE, Issue 2 compliant and designed to meet today's high-density network needs. Each frame option is designed with an emphasis on superior cable management and ease of use, including features such as ample trough space for cable and jumpers, easy access to connectors and storage for jumpers. The frame sections are shipped from the factory fully equipped with all cable management hardware including integrated jumper slack storage.

Termination Panel

ADC's 72-position termination panel is available in configurations up to 432 terminations (stacked) with multiple adapter types and can be ordered with adapters only or preterminated with intrafacility (IFC) or outside plant (OSP) cables for ease of installation.

Value-Added Module (VAM) Chassis

Adding signal management and enhancement functions, such as splitters, couplers and wavelength division multiplexers, optimizes the value of your fiber network, by providing nonintrusive access to the optical signal for monitoring and testing signal integrity. The NG3 VAM chassis accommodates various splitter and WDM MicroVAM modules.

Fiber Optic Terminal Jumper Storage Panel

ADC's fiber optic terminal jumper storage panel is used as a storage apparatus for up to 5 meters (16-feet) of equipment (FOT) jumpers. This panel can be installed between fiber frames and at the end of a lineup.

Product Overview

Recommended applications	Medium to large fiber count applications. GR-449-CORE, Issue 2 compliant
Description	Using 72-position panels in configurations up to 432 terminations (6 stacked)
Number of fibers, future growth potential	Up to 23,000
Flexibility/ability to grow	Yes
Footprint	30" Wide x 24" Deep
Interconnect	Good
Cross-connect	Excellent
Accommodates off-frame splicing	Excellent
Rear access	Must have full access to front and rear
All front access	No
Density – terminations per frame	1,440 terminations per frame
Front access to rear connector	Yes
VAM capabilities	Yes. Uses MicroVAM. Separate panel required
Slack storage location	On-frame (integrated jumper slack storage)
Connector access	Sliding adapter pack
Horizontal trough space available	30"

Frame Lineup Capacity Comparisons

	NG3 High-Density Fiber Distribution System (Generation III)	Standard ODF System (Generation I & II)
Frame termination capacity	1,440	648
Horizontal trough configuration	(6) five-inch wide rear troughs and eight-inch wide front upper and lower cable troughs	Five-inch wide front upper and lower cable troughs
Maximum number of frames in a lineup using 2.0 mm jumpers	18	6
Maximum number of frames in a lineup using 1.7 mm jumpers	26	10
Maximum number of terminations allowed in a frame lineup before exceeding two-inch pileup of 2.0 mm jumpers*	25,920	4,120
Maximum number of terminations allowed in a frame lineup before exceeding two-inch pileup of 1.7 mm jumpers*	37,440	6,422
Recommended minimum number of frames for initial installation	1	1

*Calculations based on Telcordia® GR-449-CORE, Issue 2 requirements.

Block and Frame Termination Capacity

NG3 Block Termination Capacity	NG3 Frame Termination Capacity
72	1,440

Zoning Recommendations (by Frame)

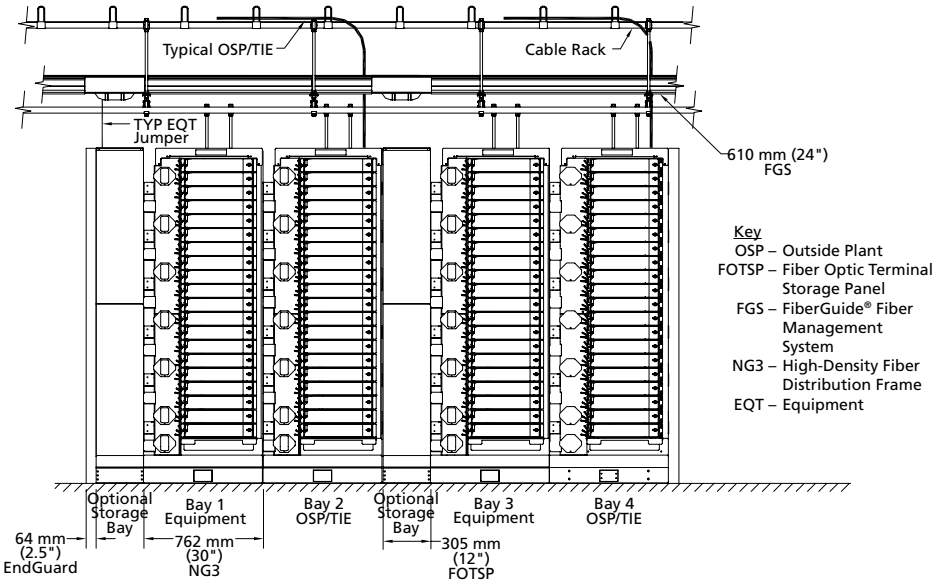

Front Elevation

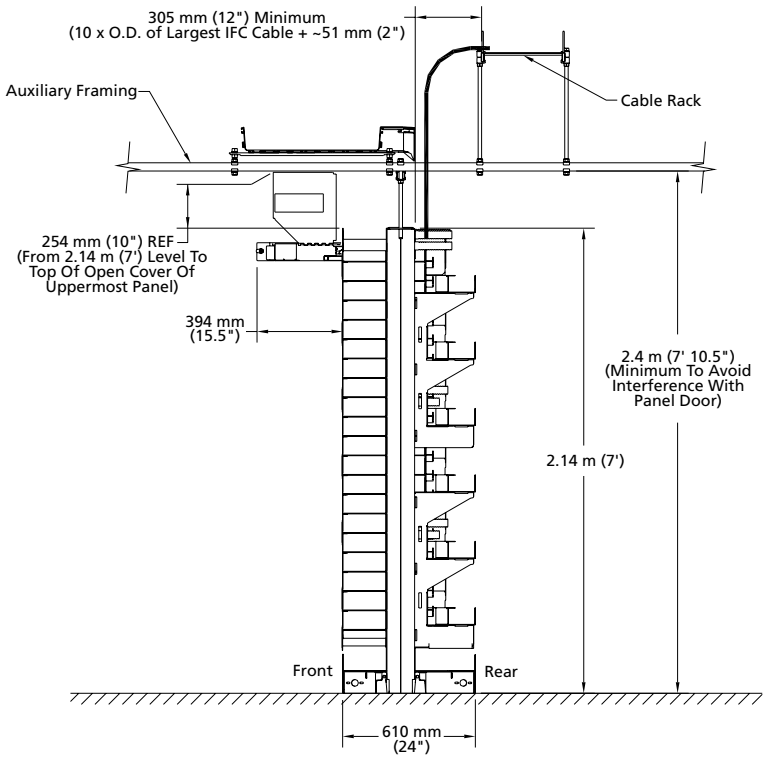

Side View

NG3® Optical Distribution Frame

Things to Consider When Ordering

How to Order

Main Components of the NG3® (Next Generation Fiber Frame 3)

	Catalog Number	Quantity
1) Select the desired Frame		
- Fiber Main Distributing Frame- Page 36	_____	_____
- Equipment Frame - Page 37	_____	_____
2) Select the desired Fiber Termination Panel		
- Preterminated Fiber Termination Panel with Multifiber Cable - IFC - Page 38	_____	_____
- Adapter-Only Fiber Termination Panel - Page 39	_____	_____
- IFC or OSP Cable Clamp Kit - Page 40	_____	_____
3) Fiber Optic Terminal Jumper Storage Panel (Rear Facing) - Page 42	_____	_____
Optional Equipment		
4) Value-Added Module (VAM) Chassis		
- NG3 VAM Chassis - Page 41	_____	_____
- LGX Compatible VAM Chassis - Page 80	_____	_____
5) NGF to NG3 Frame Spacer Kit - Page 43	_____	_____
6) End Guard - Page 44	_____	_____
7) Work Shelf - Page 44	_____	_____
8) Writing Shelf - Page 44	_____	_____
9) Frame Extender - Page 45	_____	_____
10) Grounding Kit - Page 45	_____	_____
11) AC Outlet Kit - Page 45	_____	_____
12) Frame Installation Kit - Page 46	_____	_____
13) Isolation Pad - Page 46	_____	_____
14) Lock - Page 46	_____	_____
15) Sliding Adapter Pack - Page 47	_____	_____
16) Patch Cord - Pages 103-107*	_____	_____
17) In-Line Attenuator - Page 108	_____	_____

*See page 48 for standard cross-connect patch cord lengths.

4/11 • 1037742AE

NG3® Optical Distribution Frame

Fiber Main Distributing Frame

The high-density fiber main distributing frame (FMDF) is the cornerstone of the NG3® product line. This seismic zone 4 rated frame utilizes an industry-standard base frame and has six horizontal rear troughs and front upper and lower troughs. This abundant trough space minimizes fiber pileup and congestion, leading to easier jumper traceability and removal. The frame has mounting positions for 20 NG3 72-position, high-density fiber termination panels for a total of 1,440 terminations. The vertical cable guide and slack storage system are designed to accommodate 1,440 terminations using 2.0 mm patch cords while maintaining a 1.5-inch bend radius protection at all bending locations. For additional flexibility in cable routing, the frame also includes a built-in jumper storage panel on the left side. The open design of this panel allows for nearly direct routing and shorter patch cord lengths.

The NG3 frame system meets interoperability standards covered in GR-449-CORE, Issue 2 and accommodates standard 19-inch wide frame mount equipment.

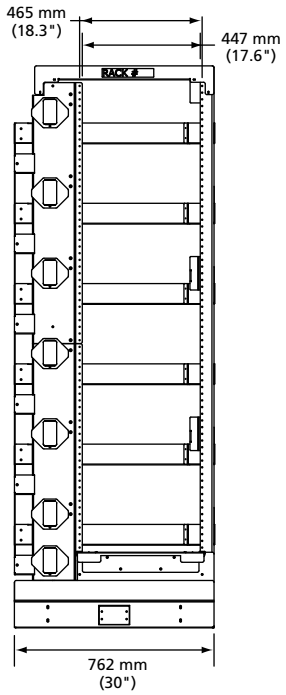

Front View

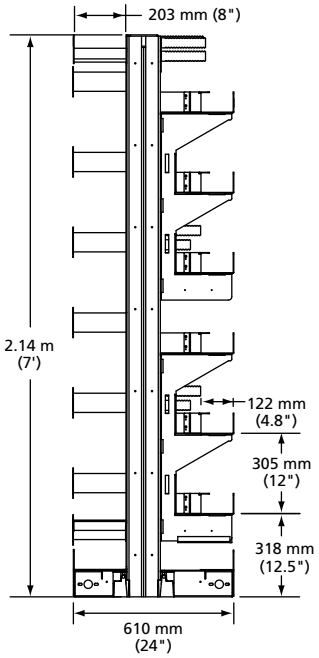

Side View

ISO View

Ordering Information

Description	Dimensions (HxWxD)	Maximum Termination Capacity	Catalog Number
NG3 fiber main distributing frame	2.14 m x 762 mm x 610 mm (7' x 30" x 24")	1,440 terminations per frame	NG3-MFTWN7A00

The frame does not include a frame installation kit.
Order the appropriate kit (FDF-ACC146 or RINST-FLR) on page 46.

NG3® Optical Distribution Frame

Equipment Frame

The NG3 equipment frame provides a mounting location for 19-inch frame mount equipment within a lineup. The equipment deployed in the frame can include video transmitters, RF splitter/combiners or remote fiber test systems.

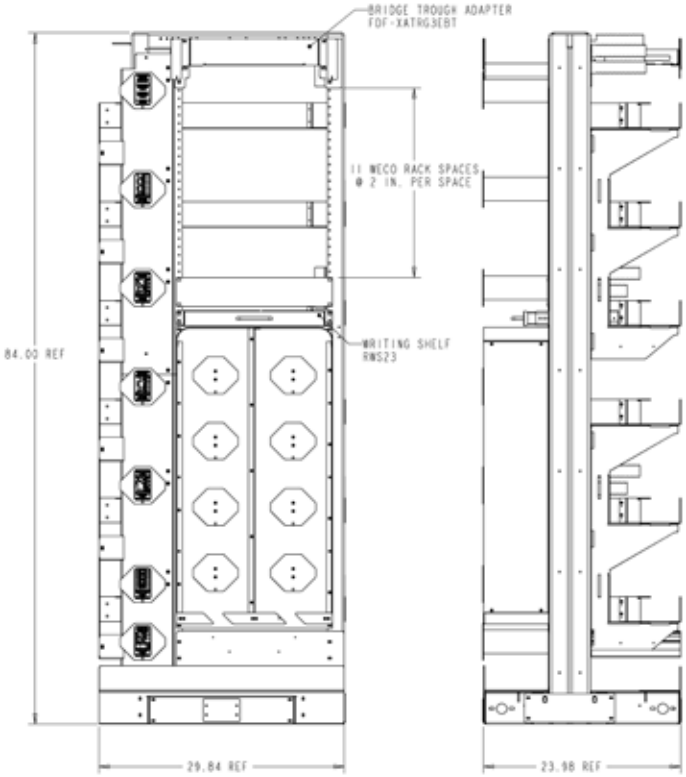

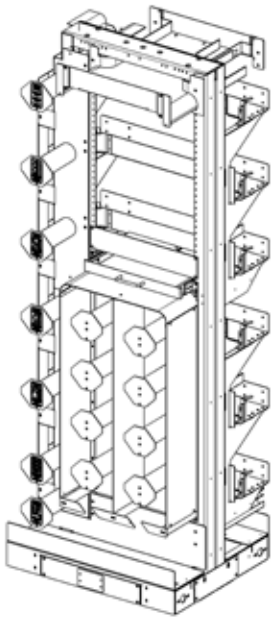

Ordering Information

Description	Dimensions (HxWxD)	Catalog Number
Equipment frame Includes: Base NG3 frame with rear horizontal troughs Writing shelf (RWS23) Slack storage system 533 mm (21") of open mounting space Upper cross-aisle (cross-aisle bridge compatible) front upper cable trough	2.14 m x 762 mm x 610 mm (7' x 30" x 24")	NG3-EBTWN7ASC

4/11 • 103742AE

NG3® Optical Distribution Frame

Preterminated Fiber Termination Panels with Multifiber Cable – IFC

Preterminated NG3 panels are available with either indoor or outdoor rated cable in ribbon or stranded configurations. All panels are 100% factory tested to guarantee continuity and reliable connections. Preterminated NG3 panels decrease the time required for installation and reduces labor costs. Panels can be configured with cable counts of 72, 144, 216 and 432. Panels loaded with 144, 216 and 432 cables are built using multiple 72-position panels that are preassembled and are installed as one unit.

Definition of Variables	
1	**Connector and Adapter Type #1** Specific adapter/connector type required at the FTB
2	**Connector Type #2** Specific connector type required at the far end opposite the FTB
3	**Cable Type** Type of cable to be terminated to the FTB
4	**Cable Length** Required length of the cable terminated to the FTB

Catalog Number

NG3-TPA _ _ _ _ _ _ _ _

1 Connector and Adapter Type #1

Singlemode	
7	SC ultra polish
L	SC angled polish
2	FC ultra polish
K	LC ultra polish[3]
M	LC angled polish[3]
Multimode (50/125 µm)	
T	SC
C	LC[3]

2 Connector Type #2

Singlemode	
0	No connector/stub end
7	SC ultra polish
L	SC angled polish
2	FC ultra polish
K	LC ultra polish[3]
M	LC angled polish[3]
Multimode (50/125 µm) Aqua	
0	No connector/stub end
T	SC
C	LC[3]

3 Cable Type (IFC Riser)

Singlemode	
KA	72-fiber ribbon[4]
ZB	72-fiber stranded
FJ	144-fiber ribbon[2,4]
ZD	144-fiber stranded[2]
K3	216-fiber ribbon[2,4]
M8	432-fiber ribbon[2,4]
Multimode (50/125 µm) LOMMF 300 m	
WG	144-fiber stranded

4 Cable Length[1]

Standard Single-Ended	
016	16 m (50')
023	23 m (75')
031	31 m (100')
046	46 m (150')
061	61 m (200')
077	77 m (250')
092	92 m (300')
122	122 m (400')
153	153 m (500')
Non-Standard	
Use XXX for non-standard length in meters	

[1] Panels using ADC's standard cable offering have a shorter lead time than panels using a specific cable manufacturer. ADC only provides GR-409 compliant cable that meets or exceeds our high quality standards. Standard cable offering above will use Corning SMF28-e, Sumitomo, Alcatel, Bertek, Pirelli or similar singlemode fiber based on current market availability.

[2] All panels are loaded with 72 adapters. 144 fiber (stranded and ribbon) cables are attached to 2 panels. 216 fiber (ribbon) cables are attached to 3 panels. 432 fiber (ribbon) cables are attached to 6 panels.

[3] LC connectors do not double the denisty of the NG3® Panel

[4] See pages 97-98 to configure beakout kits for configurations using stubbed IFC ribbon cable.

Other configurations are available upon request. Please contact ADC Technical Assistance Center.

NG3® Optical Distribution Frame

Adapter-Only Fiber Termination Panels

Fiber termination panels without fiber can be ordered fully loaded with adapters. All panels with adapters only are configured to terminate single or dual jumpers on the rear of the panel. If a multifiber breakout style cable (i.e., OSP/IFC) is to be terminated to the rear of the panel, a separate cable clamp kit is required (see page 40). ADC does not recommend mounting the NG3 fiber termination panel in any frame except ADC's NG3® high-density frame.

Shown Closed

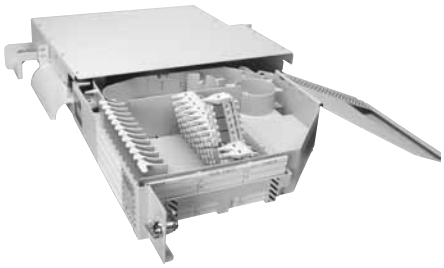

Shown Open

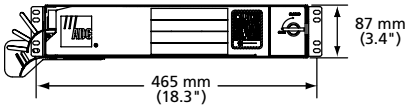

Front View

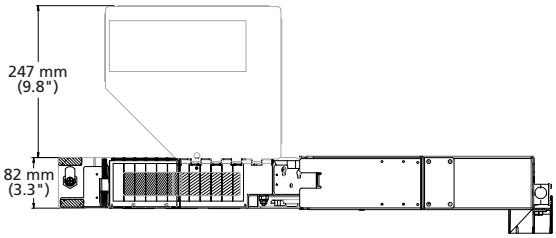

Right Side View
(Shown with Tray Open and Tray Cover at Tallest Position for Simplicity, Labels not Shown)

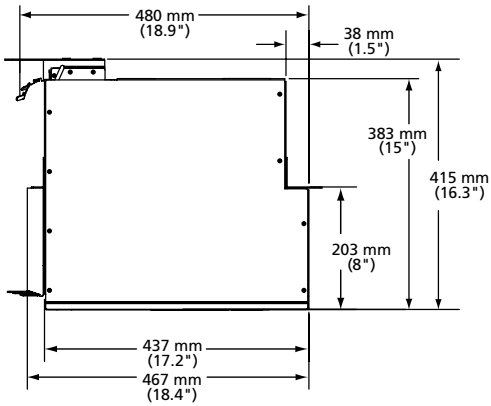

Top View

Catalog Number
NG3-TPA __00

Adapter Type

Singlemode	
7	SC ultra polish
L	SC angled polish
2	FC ultra polish
K	LC ultra polish[1]
M	LC angled polish[1]
Multimode (50/125 µm) Aqua	
T	SC
C	LC[1]

[1] LC connectors do not double the denisty of the NG3® Panel

Other configurations are available upon request. Please contact ADC Technical Assistance Center.

NG3® Optical Distribution Frame

Cable Clamp Kit

IFC Clamp Kit

Unterminated adapter-only panels are configured to accommodate single fiber jumpers or multifiber breakout cables. Additional hardware is required to load a preterminated intrafacility cable (IFC). The conversion kit (shown here) contains the cable management hardware, brackets and cable clamps required to properly clamp IFC. Each panel has two cable clamp positions.

IFC Clamp Kit
(NG3-ACCIFCKIT Shown)

Ordering Information

Description	Catalog Number
IFC single clamp kit	NG3-ACCIFCKIT
IFC triple clamp kit	NG3-ACC3TRCLMP

OSP Cable Clamp Kit

This cable clamp kit is available for securing OSP (outside plant) cable on the rear of the hinged fiber termination panel. Each panel has two cable clamp mounting positions and each kit contains proper OSP grounding hardware.

Ordering Information

Description	Catalog Number
OSP cable clamp kit for OSP dielectric cable with grounding hardware (included with fiber termination blocks with IFC)	NGF-ACCCLMP08

NG3® Optical Distribution Frame

MicroVAM and MPO Chassis

The NG3® MicroVAM chassis houses up to 13 MicroVAM modules. These MicroVAM modules are ADC's highest density and most versatile VAM modules.

MicroVAM Chassis

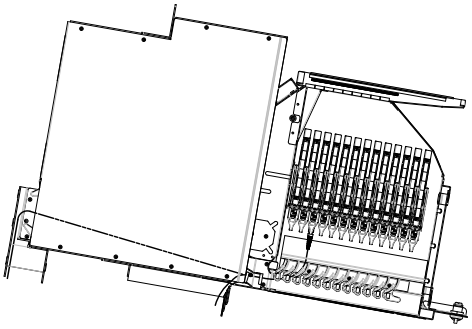

NG3-VPB0000
(Shown Loaded)

Ordering Information

Description	Dimensions (HxWxD)	Catalog Number
NG3 MicroVAM chassis, unloaded; accommodates up to 13 single all front access MicroVAMs for monitoring optical signals	89 mm x 483 mm x 381 mm (3.5" x 19" x 15")	NG3-VPB0000

Value-Added Module (VAM) System

ADC offers an expansive line of monitor, splitter, WDM and CWDM VAM plug-in modules designed to meet all application needs. Please reference the **Value-Added Module (VAM) System Catalog #101663AE** for details at www.adc.com or contact ADC Customer Service.

NG3 Chassis
with Rear MPO Interface

Ordering Information

Description	Catalog Number
NG3 Preterminated fiber termination panel (FTP) with MPO connectors; Capacity: 72	
Connector type: SC/UPC Singlemode.	NG3-TPA700-R
Connector type: LC/UPC Singlemode.	NG3-TPAK00-R
Connector type: MMLC Multimode (aqua). OM3 (50/125)	NG3-TPAC00-R
Connector type: MMSC Multimode (aqua). OM3 (50/125)	NG3-TPAT00-R

4/11 • 103742AE

NG3® Optical Distribution Frame

Frame Accessories

Fiber Optic Terminal Jumper Storage Panel (Rear Facing)

In cross-connect applications, a jumper (often single fiber) is routed from the fiber optic terminal (FOT) equipment to the rear port of an adapter-only NG3® panel through a fiber raceway system, such as ADC's FiberGuide® system. Traditionally the excess slack in those jumpers has been stored at the FOT equipment end. However, there typically is not a provision for storing excess jumper slack near the FOT equipment. The optional fiber optic terminal equipment jumper storage panel is a filler panel that mounts next to the NG3 frame and provides storage capacity for up to 3.6 meters (12 feet) of excess jumper slack. The panel is mounted to the left side of the frame it is serving and is accessed from the rear of the frame.

Ordering Information

Description	Dimensions (HxWxD)	Catalog Number
Fiber optic terminal jumper storage panel; for use with single and dual jumpers	2.14 m x 305 mm x 610 mm (7" x 12" x 24")	NG3-FOTSP3TWN7A12

NGF to NG3® Frame Spacer Kit

The 2.5-inch wide frame spacer kit is required for transition between next generation frames (NGFs) and NG3 frames. The kit includes six rear trough adapters that ensure the rear cable management features of both fiber frames are utilized. Tie brackets and a kick plate are also included for a secure installation. For technical documents outlining the proper procedure for making these transitions, please contact your ADC sales representative.

Ordering Information

Description	Catalog Number
Mounts on right side of NG3 frame and **left side of NGF frame**	NG3-NGFTRNTWN7A0R
Mounts on left side of NG3 frame and **right side of NGF frame**	NG3-NGFTRNTWN7A0L

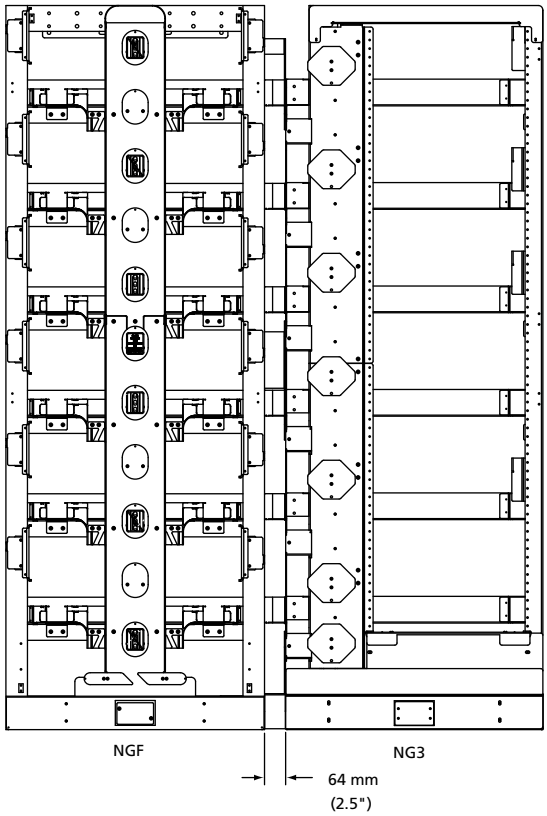

Frame Spacer Kit
(NG3-NGFTRNTWN7A0L Shown)

NG3® Optical Distribution Frame

Frame Accessories

End Guard

The end guard provides protection for the fibers entering and exiting frames at the ends of a lineup.

Ordering Information

Description	Dimensions (HxWxD)	Catalog Number
End guard mounts on frame	2.14 m x 64 mm x 610 mm (7' x 2.5" x 24")	NG3-EGDTWN7A00

Work Shelf

The work shelf can mount at any one of six positions within the NG3 frame and anywhere along the height of the frame. It provides a surface for miscellaneous objects (i.e. isopropyl alcohol, tissues and cotton swabs for cleaning connectors); also provides a writing surface or serves as an aid in field terminating cables and jumpers.

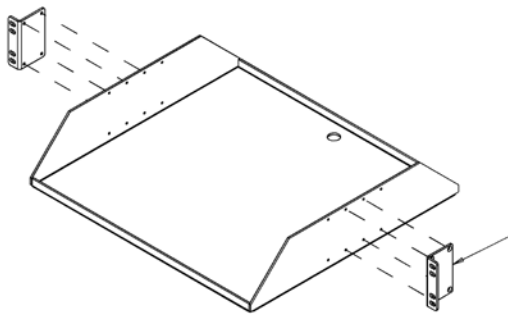

Work Shelf
(NG3-ACCWORKSHELF01 Shown)

Ordering Information

Description	Dimensions (HxWxD)	Catalog Number
Work shelf	89 mm x 483 mm x 413 mm (3.5" x 19" x 16.25")	NG3-ACCWORKSHELF01

Writing Shelf

The retractable writing shelf provides a writing surface during maintenance activities. The shelf is usually mounted at arm level on the frame for easily accessible writing space.

Writing Shelf
(RWS19-FDF Shown)

Ordering Information

Description	Dimensions (HxWxD)	Catalog Number
Retractable writing shelf with pencil drawer	44 mm x 483 mm x 279 mm (1.75" x 19" x 11")	RWS19-FDF

Frame Extender

The frame extender is used to extend the height of a 7-foot frame to the appropriate ceiling height so that it can be secured overhead. NG3® termination panels are designed to be mounted up to 7 feet. Frame extenders do not extend panel mounting capacity.

Ordering Information

Description	Catalog Number
Frame extender	
305 mm (12")	NG3-ACCEXTMFTWN-12
610 mm (24")	NG3-ACCEXTMFTWN-24
1.3 m (54")	NG3-ACCEXTMFTWN-54

Grounding Kit

The NG3 fiber distributing frame is equipped with a grounding kit designed with mechanical fittings (clamps, straps, connectors). Order this kit only if you are building a frame using your own frame. When connecting frame ground to office ground conductor, an H-TAP bonding kit should also be ordered.

Ordering Information

Description	Catalog Number
Grounding kit	E-501-L37*
H-TAP bonding kit	E-501-L166

*Included with NG3 fiber frame

Grounding kit includes:

2 hole terminal lug	1 each
#6 AWG copper tinned wire	13'
Wire clips	8 each
#12-24 x 1/2" screws	10 each

H-TAP bonding kit includes:

H-TAP	1 each
H-TAP insulated cover	1 each
2 hole terminal lug, crimp	3 each
Terminal lug, screw	4 each
#6 AWG stranded insulated wire	2'
Star washer	6 each
No-ox grease	1 tube

AC Outlet Kit

The AC outlet kit provides the hardware for mounting AC power outlets on the frame. Each kit includes a prewired AC power outlet strip that mounts at the bottom of the frame. An outlet cover is available to cover the space in the frame should power outlets not be required.

Ordering Information

Description	Catalog Number
Dual outlet; mounts in base of NG3 frame	ACOK-5
AC outlet cover kit	RAC-0X0493

NG3® Optical Distribution Frame

Frame Accessories

Frame Installation Kit

Frame installation kits may be used on network frames and are seismic zone 4 rated. Kits include all necessary hardware.

Ordering Information

Description	Catalog Number
Frame installation kits for Computer floor	FDF-ACC146
Overhead support	RINST-TOP7
Concrete floor	RINST-FLR

Isolation Pad

A template for frame installation providing isolation between the frame, fiber optic terminal storage bay, end guard and the ground.

Ordering Information

Description	Catalog Number
NG3 isolation pad (for frame)	NG3-ACCISOPMFTWN
Isolation pad (for fiberoptic terminal jumper storage panel)	NG3-ACCISOPFOTSP12
Isolation pad (for NG3® end guard)	NG3-ACCISOPEGD

Lock

A keyed lock to replace the existing rotary latch for added security.

Ordering Information

Description	Catalog Number
NG3 lock (keyed)	IPA-K1

Sliding Adapter Pack

Sliding adapter packs house groups of fiber optic adapters and are mounted in fiber termination blocks to provide easy access to connectors. Sliding adapter packs are available with SC, FC and LC adapters. Each adapter pack provides six terminations.

Sliding Adapter Pack

Catalog Number
NG3-SAP __ 0N00

Adapter Type

Singlemode	
7	SC ultra polish
L	SC angled polish
2	FC ultra polish
K	LC[1] ultra polish
M	LC[1] angled polish
Multimode (50/125 µm) Aqua	
T	SC
C	LC[1]

[1] LC connectors do not double the density of the NG3 adapter pack.

Other configurations are available upon request. Please contact ADC Technical Assistance Center.

Standard Cross-Connect Patch Cord Lengths

Total Number of Sections Traversed*	Approximate Patch Cord Length Meters (Feet)
Same frame	3 m (10')
Adjacent frames	5 m (16')
3 to 4	6 m (23')
5 to 6	8 m (26')
7 to 8	9 m (33')
9 to 10	11 m (36')

*Depending on office requirements, 11 or more frame sections may require the use of interbay tie panels.
For additional information, please call ADC Technical Assistance Center, 1-800-366-3891.
For recommended cross-connect methods refer to user manual ADCP-90-296.
For Installation instructions, refer to user manual ADCP-90-295.

Ordering Information for Patch Cords and Attenuators

ADC offers a comprehensive line of cable assembly and accessory products including patch cords, IFC assemblies, attenuators, FasTerm® connectors and adapters to meet the demanding needs of today's network. Please refer to the **Fiber Cable Assemblies Catalog #102880AE** at www.adc.com for more detailed information. For your convenience, ordering information for patch cords and attenuators can also be found on pages 103-108

Traditional Frame Solutions

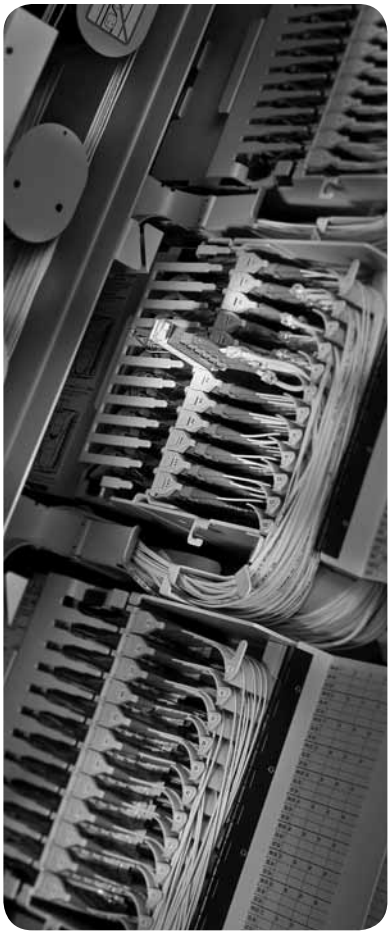

8-Inch FCM Optical Distribution Frame

Introduction 50
Things to Consider When Ordering 51
Frame 53
Termination Panels 54
Splice Panels 56
Value-Added Module (VAM) Chassis 57
Accessories 58
Standard Cross-Connect Patch Cord Lengths 68

LSX Optical Distribution Frame

Introduction 69
Things to Consider when Ordering 70
Frames 71
Termination Panels 75
Splice Panels 79
Value-Added Module (VAM) Chassis 80
Accessories 81
Standard Cross-Connect Patch Cord Lengths 85

8-Inch FCM Optical Distribution Frame

Introduction

Frame

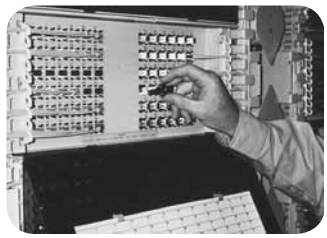

ADC's 8-inch FCM solution utilizes a traditional frame designed to fit a variety of termination, splice and storage applications. This rear load frame is built to ensure commonality with patch cord routing, slack storage and fiber protection. It is shipped complete with enhanced front cable management, top and bottom troughs. Available accessories include interbay management panels (IMPs), rear slack storage, etc.

Termination Panel

The termination panel is available with multiple adapter types using angled retainers in configurations of 72, 96, 144 and higher and can be ordered with adapters only or preterminated with either intrafacility (IFC), outside plant (OSP) cables or pigtails for ease of installation.

Splice Panel

ADC's splice panel protects splices of multiple splice types.

Storage Panel

The 8-inch FCM storage panel stores patch cords discreetly or in bulk.

Value-Added Module (VAM) Chassis

Adding signal management and enhancement functions, such as splitters, couplers and wavelength division multiplexers, optimizes the value of your fiber network, by providing nonintrusive access to the optical signal for monitoring and testing signal integrity. ADC's 8-inch FCM VAM chassis accommodates various splitter and WDM modules.

Product Overview

Recommended applications	Small to medium fiber count applications. Best cable management solution in traditional ODF.
Description	Traditional footprint; 72-, 96- and 144-position panels
Number of fibers, future growth potential	Up to 5,000
Interconnect	Good
Cross-connect	Excellent
Accommodates on-frame splicing	Very good
Accommodates off-frame splicing	Very good
Rear access	Required. Has excellent rear cable management
Density – terminations per frame	1,152 terminations per frame
Front access to rear connector	Yes
VAM capabilities	Yes. Separate panel required
Slack storage location	IMP. Positive bend radius protection
Connector access	Angled retainer

8-Inch FCM Optical Distribution Frame

Things to Consider When Ordering

Configuration Form

This page **may be copied and used to configure** this rear load frame.* The configuration drawing may **then be attached to an order.**

- Rear load frames are typically used in cross-connect applications in which splicing is done in the vault or a designated off-frame splice area
- Interbay management panels and end guards shown here are ordered and shipped separately
- Preterminated rear load panels are shipped separately from the frame
- 14-inch lower troughs are recommended for most applications; however, other lower troughs are available, see page 63

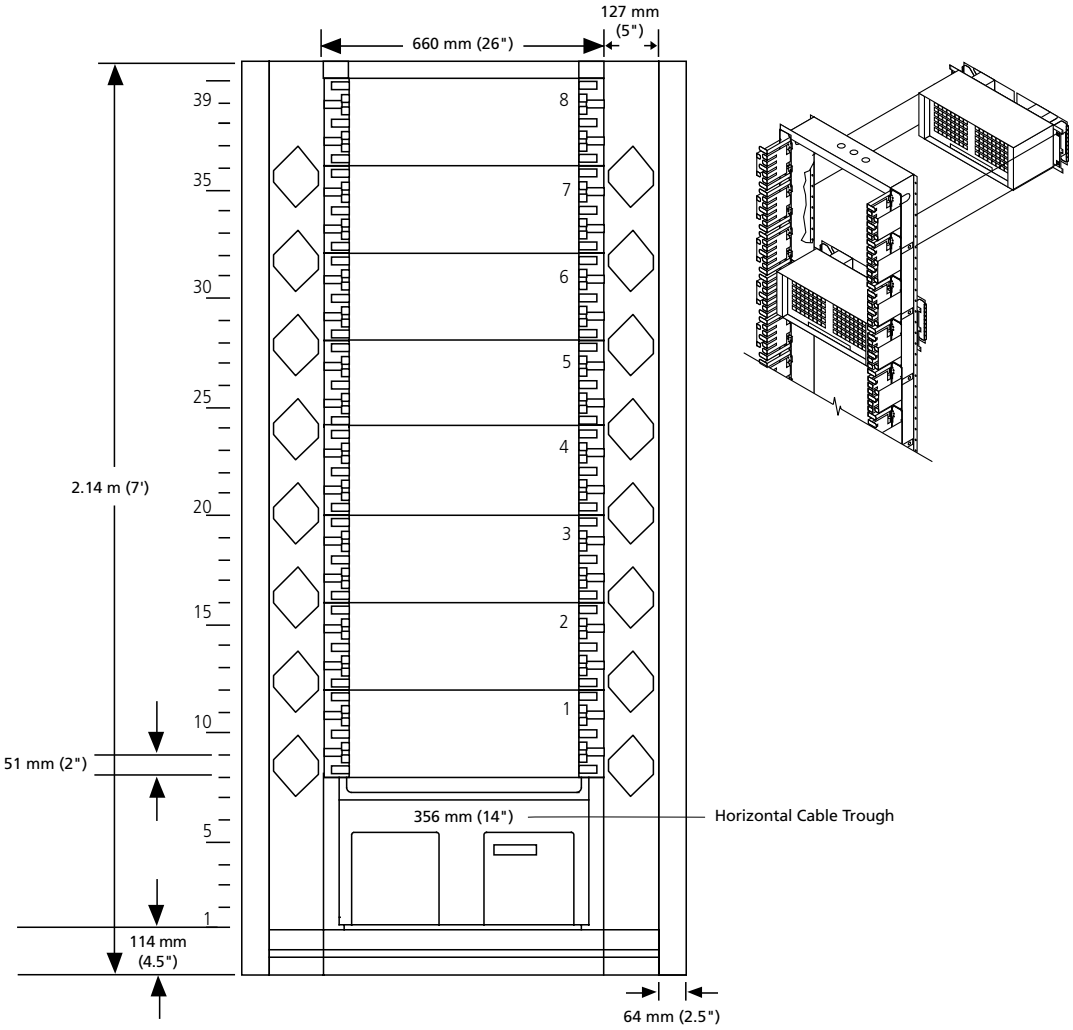

*Legacy front load panels and accessories remain available. Please contact ADC Technical Assistance Center for ordering information.

8-Inch FCM Optical Distribution Frame

Things to Consider When Ordering

How To Order

This page may be copied and used to configure this rear load frame. The configuration drawing on the previous page may then be attached to an order.

Main Components of the 8-Inch FCM Frame	Catalog Number	Quantity
1) Select desired Frame	_____	_____
- Fiber Main Distributing Frame (Rear Load) - Page 53	_____	_____
2) Select desired Fiber Termination Panels		
- Preterminated Fiber Termination Panel with Multifiber Cable-IFC - Page 54	_____	_____
- Adapter-Only Fiber Termination Panel - Pages 55	_____	_____
- Splice Panel - Page 56	_____	_____
Optional Equipment		
3) Value-Added Module (VAM) Chassis - Page 57	_____	_____
4) Interbay Management Panel - Page 58	_____	_____
5) Fiber Optic Terminal Storage Panel (Rear Facing) - Page 59	_____	_____
6) End Guard - Page 59	_____	_____
7) Guard Box (Underfloor) - Page 60	_____	_____
8) Frame Installation Kit - Pages 61–62	_____	_____
9) Horizontal Cable Trough - Page 63	_____	_____
10) Frame Filler Plate - Page 63	_____	_____
11) AC Outlet Kit and Raceway - Page 64	_____	_____
12) Rack Extenders - Page 64	_____	_____
13) Grounding Kit - Page 65	_____	_____
14) Vertical Cable Guide (VCG) Kit - Page 66	_____	_____
15) Blank Panel - Page 66	_____	_____
16) Cable Clamp Kit and Dual Cable Clamp Kit - Page 66	_____	_____
17) Assembled Splice Tray and Chip - Page 67	_____	_____
18) Splice Protector Sleeve - Page 67	_____	_____
19) Patch Cord - Pages 68, 103–107*	_____	_____
20) In-Line Attenuator - Page 108	_____	_____

*See page 68 for standard cross-connect patch cord lengths.

8-Inch FCM Optical Distribution Frame

Fiber Distribution Frame (Rear Load)

Fiber Distribution Frame (Rear Load)

Rear load frames[1] are recommended for applications when splicing is done in the vault or at an off-frame splice area. One rear load frame can accommodate up to eight 8-inch panels. A 7-foot frame supports up to 1,152 terminations. Rear load FCM frames come equipped with unequal flange network type 4.5-inch guard box frame, 14-inch lower horizontal cable trough, front vertical cable guides, ground wire kit, and cable tie brackets. Rear load panels come equipped with rear fanning triangles and 8-inch rear doors.

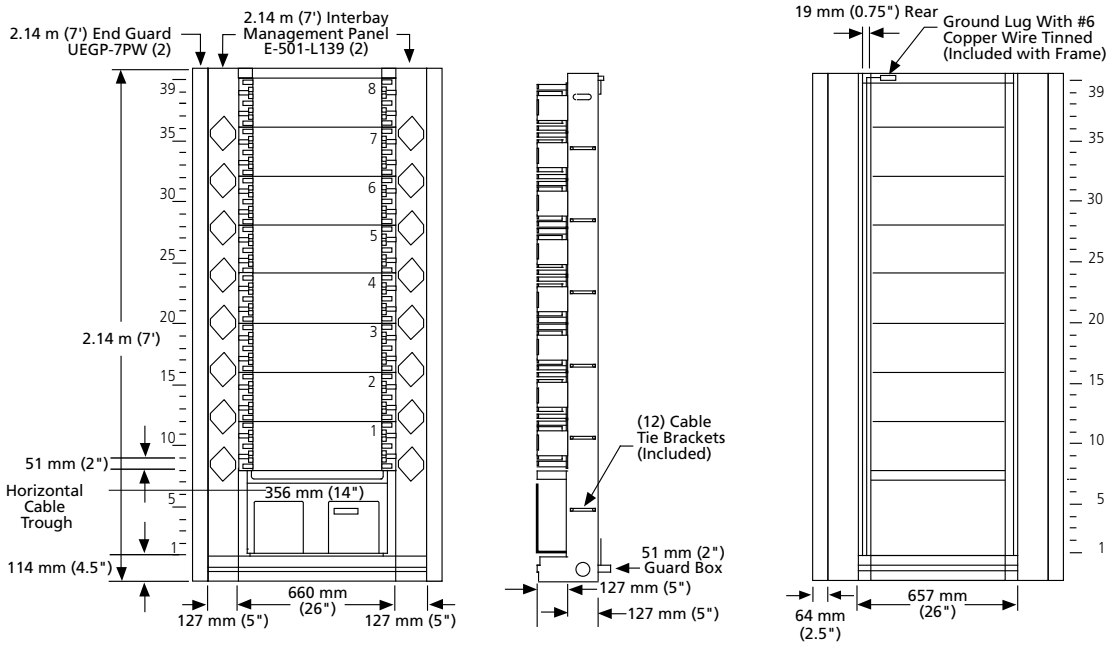

Front View[2] **Rear View**[2]

Ordering Information

Description	Dimensions (HxWxD)	Catalog Number
8-inch FCM fiber distribution frame Network style unequal flange rear load frame with 356 mm (14") trough		
2.14 m (7')	2.14 m x 660 mm x 305 mm (7' x 26" x 12")	E-501-L91
2.76 m (9')	2.76 m x 660 mm x 305 mm (9' x 26" x 12")	E-501-L92
3.51 m (11.5')	3.51 m x 660 mm x 305 mm (11.5' x 26" x 12")	E-501-L93

For existing lineups with 6", 8" or 16" lower cable troughs, contact ADC Technical Assistance Center.

[1] Legacy front load panels and accessories remain available. Please contact ADC Technical Assistance Center for ordering information.

[2] Interbay management panels and end guards shown are for reference only. They are ordered separately; see page 58 for ordering information.

4/11 • 103742AE

8-Inch FCM Optical Distribution Frame

Preterminated Fiber Termination Panels with Multifiber Cable – IFC

Preterminated 8" FCM rear load[1] panels are available with either indoor or outdoor rated cable in ribbon or stranded configurations. All panels are 100% factory tested to guarantee continuity and reliable connections. Panels with IFC attached ship as a single unit with the cable clamp factory installed. If a panel is custom ordered only partially loaded with cable, it is still completely loaded with adapters. An instruction kit describing installation procedures is included with the panel.

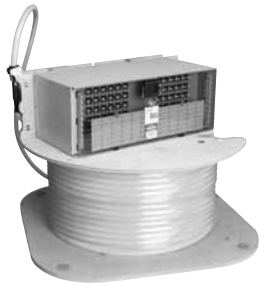

Catalog Number

FCM- _ _ _ / _ _ _ _ _

Singlemode/Multimode

Leave blank	Singlemode
M	Multimode

Panel Type

6	72-positon
7	96-position
Z	144-position
T	144-position (for LC only)

Connector and Adapter Type #1

Singlemode	
7	SC ultra polish
L	SC angled polish
2	FC ultra polish
K	LC ultra polish (144 only)
M	LC angled polish (144 only)
Multimode (50/125 µm) Aqua	
T	SC
C	LC (144 only)

Connector or Adapter Type #2

Singlemode	
0	No connector/stub end
7	SC ultra polish
L	SC angled polish
2	FC ultra polish
K	LC ultra polish (144 only)
M	LC angled polish (144 only)
Multimode (50/125 µm) Aqua	
0	No connector/stub end
T	SC
C	LC (144 only)

Cable Length[2]

Standard Single-Ended	
016	16 m (50')
023	23 m (75')
031	31 m (100')
046	46 m (150')
061	61 m (200')
077	77 m (250')
092	92 m (300')
122	122 m (400')
153	153 m (500')
Non-Standard	
Use XXX for length in meters	

Cable Type (IFC Riser)[3]

Singlemode	
ZB	72-fiber stranded
DS	72-fiber ribbon[4]
ZC	96-fiber stranded
LA	96-fiber ribbon[4]
ZD	144-fiber stranded
LH	144-fiber ribbon[4]
Multimode (50/125 µm) LOMMF 300 m	
WE	96-fiber stranded
WG	144-fiber stranded

[1] Legacy front load panels and accessories remain available. Please contact ADC Technical Assistance Center for ordering information.

[2] Panels using ADC's standard cable offering have a shorter lead time than panels using a specific cable manufacturer. ADC only provides GR-409 compliant cable that meets or exceeds our high quality standards. Standard cable offerings include Alcatel, Corning, Berk-Tek, Sumitomo and Prysmian.

[3] Standard cable exit direction is upward.

[4] See pages 94-98 to configure breakout kits for configuration using stubbed IFC ribbon cable.

Other configurations are available upon request. Please contact ADC Technical Assistance Center.

8-Inch FCM Optical Distribution Frame

Adapter-Only Fiber Termination Panels

This panel is designed to be mounted in an ADC rear load* frame equipped with cable management hardware. All rear load panels come with rear doors and cable management attached. The FCM panel contains removable angled retainers; angled toward left and right side, ensuring minimum bend radius. Angled retainers are designed for easy removal without use of tool; allowing easy access to back of the adapter/receptacle from the front of the frame. Fanning strips provide organization and cable management at point of entry to the panel. The removable transparent, smoked plastic cover encloses the front of panel while protecting fibers and connectors from disturbance. The designation card identifies each cable and is visible when cover is open or closed.

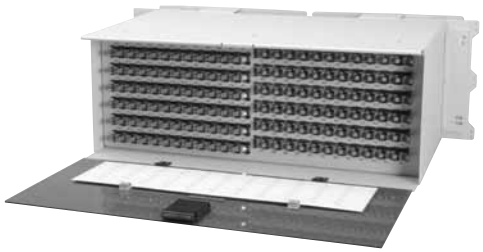

144-Position Panel
(Front View)

Ordering Information

Number of Terminations	Adapter Type	Numbered	Catalog Number
72	**Singlemode**		
	SC ultra polish	Vertically	FCM-670000
	SC angled polish	Vertically	FCM-6L0000
	FC ultra polish	Vertically	FCM-620000
	Multimode (50/125 µm) Aqua		
	SC	Vertically	MFCM-6T0000
96	**Singlemode**		
	SC ultra polish	Vertically	FCM-770000
	SC angled polish	Vertically	FCM-7L0000
	FC ultra polish	Vertically	FCM-720000
	Multimode (50/125 µm) Aqua		
	SC	Vertically	MFCM-7T0000
144	**Singlemode**		
	SC ultra polish	Vertically	FCM-Z70000
	SC angled polish	Vertically	FCM-ZL0000
	LC ultra polish (72 duplex LC)	Vertically	FCM-TK0000-144
	LC angled polish (72 duplex LC)	Vertically	FCM-TM0000
	Multimode (50/125 µm) Aqua		
	SC	Vertically	MFCM-ZT0000
	LC (72 duplex LC)	Vertically	MFCM-TC0000

*Legacy front load panels and accessories remain available. Please contact ADC Technical Assistance Center for ordering information.

8-Inch FCM Optical Distribution Frame

Splice Panels

Splice panels for rear load* frames include 8-inch rear doors and rear cable management. The eight splice drawers provide protective enclosure for mounting splice trays and coiling of the service loop, which is required for off-shelf splicing. Both outside plant (OSP) cable and fiber optic patch cords are terminated at the rear of the FCM, keeping them secure while routine maintenance is performed on the front of the FCM. Each splice drawer holds two 12-fiber single splice trays or one 24-fiber dual splice tray. Splice trays are available with all industry-standard splice chips. See page 85 for ordering information. Each drawer is designed to handle twenty-four 900 micron pigtails or twelve 3.0 mm pigtails. Designation labels are attached to the front of each drawer to identify its contents. The cover encloses the splice panel for protection from normal frame activity. Pigtails and OSP buffer tubes enter and exit through openings on the back of the panel. The splice tray with slack take-up wheel keeps constant tension on the fiber cable, preventing binding when the drawer is closed.

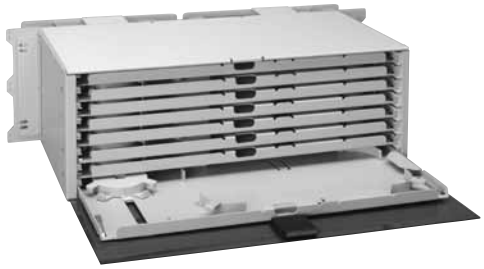

Splice Panel

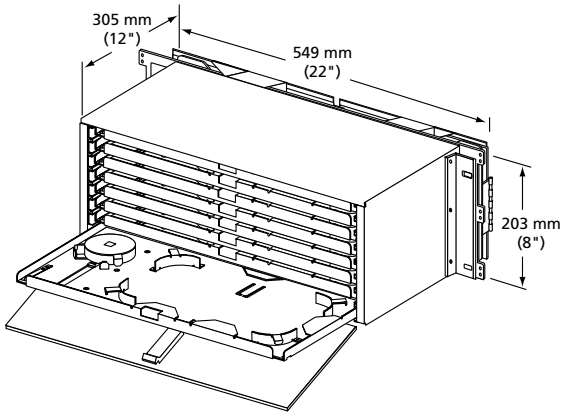

Splice Panel
(E-501-L18 Shown)

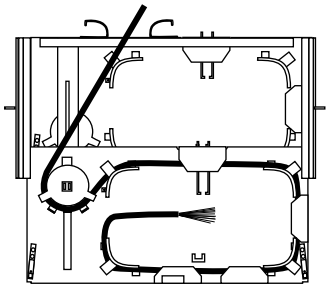

Splice Panel
Loaded with Pigtails
(Top View)

Ordering Information

Description	Dimensions (HxWxD)	Catalog Number
Splice panel for rear load frames	203 mm x 620 mm x 305 mm (8" x 24.4" x 12")	E-501-L18
Cable clamp	10 mm – 31 mm (0.4" – 1.2" outer diameter)	E-501-L40

Cable clamps must be ordered separately; please see page 66 for an additional cable clamp option.

*Legacy front load panels and accessories remain available. Please contact ADC Technical Assistance Center for ordering information.

8-Inch FCM Optical Distribution Frame

Value-Added Module (VAM) Chassis

8-Inch FCM Standard VAM Chassis – 12 Single Plug-In Modules

The 8-inch FCM standard VAM chassis fits into any open chassis location and ships with appropriate rear cable management. It accommodates a maximum of either 12 plug-in modules, 12 bulkhead plates, 12 blank panels or any combination thereof. The 8-inch rear load chassis* mounts in EIA or WECO racks. **Compatible with ADC's rear load frame system only.***

Standard VAM Chassis

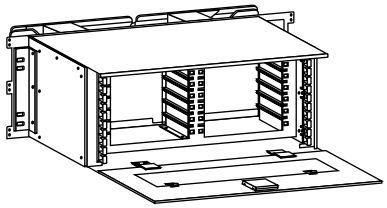

FDF-FCMVAM

Ordering Information

Description	Dimensions (HxWxD)	Catalog Number
8" FCM standard VAM chassis, unloaded; rear cable management and doors attached to module	203 mm x 620 mm x 307 mm (8.0" x 24.4" x 12.1")	FDF-FCMVAM

8-Inch FCM WideVAM® Chassis

ADC's 8-inch WideVAM chassis allows efficient integration of optical components into the frame and provides the utmost protection, modularity and flexibility for all optical component needs. Incorporating 18 front and 10 rear ports, this chassis provides 50 percent more density than the standard FCM VAM chassis.

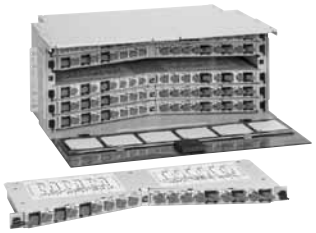

WideVAM Chassis and Single Module (7' H WideVAM Chassis shown)

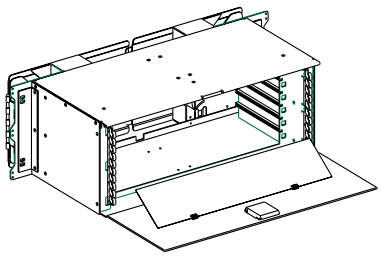

FDF-FCMWVAM

Ordering Information

Description	Dimensions (HxWxD)	Catalog Number
8" FCM WideVAM chassis, unloaded; accommodates 6 single WideVAM modules	203 mm x 620 mm x 308 mm (8" x 24.4" x 12.1")	FDF-FCMWVAM

Value-Added Module (VAM) System

ADC offers an extensive line of monitor, splitter, WDM and CWDM VAM plug-in modules designed to meet all application needs. Please reference the **Value-Added Module (VAM) System Catalog #101663AE** for details at www.adc.com or contact ADC Customer Service.

*Legacy front load panels and accessories remain available. Please contact ADC Technical Assistance Center for ordering information.

Interbay Management Panel

The interbay management panel (IMP) provides storage between the frames for cross-connect jumpers. IMPs are available for 7-, 9- or 11.5-foot frames. The trough filler insert protects the fiber in the lower trough between the frames. The IMP includes a lower guard box and a 5-inch trough filler insert. In order to provide space for these panels, all frames must be spaced 5-inches apart.

Ordering Information

Description	Catalog Number
Interbay management panel; includes trough filler insert and lower 5" guard box Use with 356 mm (14") trough only	
2.14 m x 127 mm x 305 mm (7' H x 5" W x 12" D)	E-501-L139
2.76 m x 127 mm x 305 mm (9' H x 5" W x 12" D)	E-501-L142
3.51 m x 127 mm x 305 mm (11.5' x 5" W x 12" D)	E-501-L143
Optional covers; for interbay management panels. Cover can be used with 9' and 11.5' IMP's. Extends to 7' level only.	E-501-L409

Optional cover kits are available for 14" lower troughs.
For existing lineups with 6", 8" or 16" lower cable troughs, call ADC Technical Assistance Center.

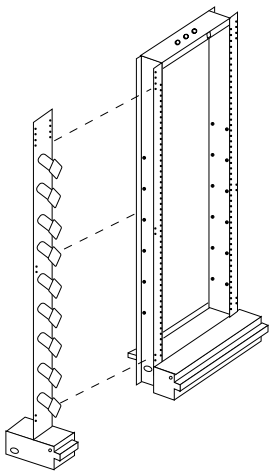

Interbay Management Panel

Fiber Optic Terminal Jumper Storage Panel (Rear Facing)

The fiber optic terminal jumper storage panel provides cable management and service loop storage of fiber optic patch cords typically routed between an FCM and fiber optic terminal equipment. The kit contains one storage panel with spools and mounting hardware to secure the panel to the frame. The panel can be installed in existing lineups and mounts on either side of the FCM frame. It attaches easily to 7-, 9- or 11.5-foot frames. ADC recommends storing excess patch cord slack at the FOT to distribute the slack to multiple locations throughout the central office/headend. The fiber optic terminal storage panel cannot be mounted onto the frame if any cable clamps are present on that side of the frame. **Contact ADC Technical Assistance Center to determine the optimal storage for your application.**

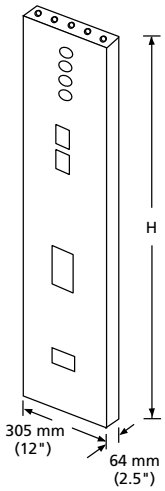

End Guard

Ordering Information

Description	Catalog Number
Fiber optic terminal jumper storage panel (rear facing); Includes one storage panel, with spools and mounting hardware	FDF-RFSP

End Guard

End guards provide protection and a finished appearance at the start and end of frame lineups. They attach to either a frame or an interbay management panel. End guards serve as a mounting place for outlets and switches and are used interchangeable for either left or right applications.

Ordering Information

Description	Catalog Number
End guard; mounts on IMP or network style frame	
2.14 m x 64 mm x 305 mm (7' H x 2.5" W x 12" D)	UEGP-7PW
2.76 m x 64 mm x 305 mm (9' H x 2.5" W x 12" D)	UEGP-9PW
3.51 m x 64 mm x 305 mm (11.5' H x 2.5" W x 12" D)	UEGP-115PW

Guard Box (Underfloor)

Ordering Information

Description	Dimensions (HxWxD)	Catalog Number
Rear access only. Used for routing OSP, IFC cable or patch cords from underfloor to the rear of the frame.	100 mm x 125 mm x 125 mm (3.9" x 4.9" x 4.9")	FDF-ACC139
Front and rear access. Used for routing OSP, IFC or patch cords from under floor to the rear of the frame and patch cords from underfloor to the front of the frame.	179 mm x 218 mm x 127 mm (7.1" x 8.6" x 5")	FDF-ACC152

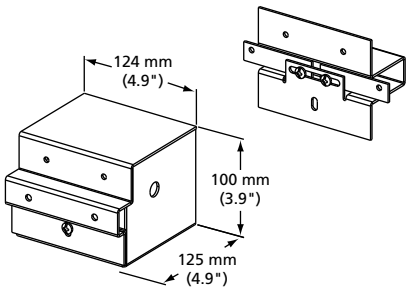

Rear Access Underfloor Guard Box
(Front View)
FDF-ACC139

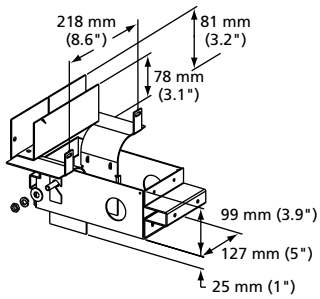

Front/Rear Access Underfloor Guard Box
(Rear View)
FDF-ACC152

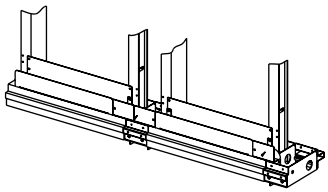

Shown Installed Between Network Frames and at End of a Lineup
(Front View)
FDF-ACC152

Frame Installation Kit

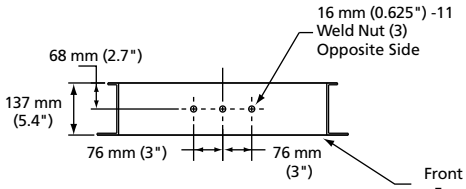

Top Mounting Detail
2.14 m (7')

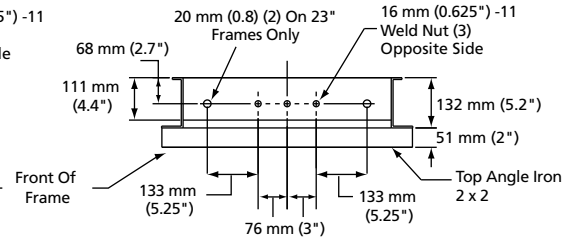

Top Mounting Detail
2.44 m, 2.74 m, 3.51 m (8', 9', 11.5')

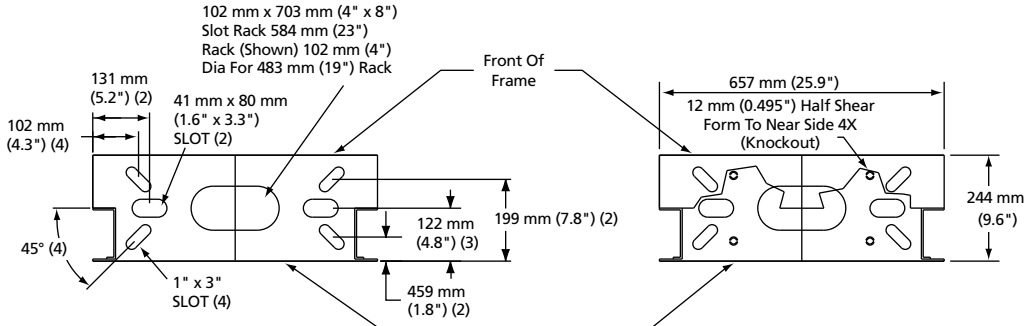

Base Mounting Detail
2.14 m, 2.44 m, 2.74 m, 3.51 m
(7', 8', 9', 11.5')
(Bottom View)

51 mm (2") Guard
Box Has Been
Removed For Clarity

Base Mounting Detail
2.14 m, 2.44 m, 2.74 m, 3.51 m
(7', 8', 9', 11.5')
(Top View)

Network Type Unequal Flange Frame Mounting Details

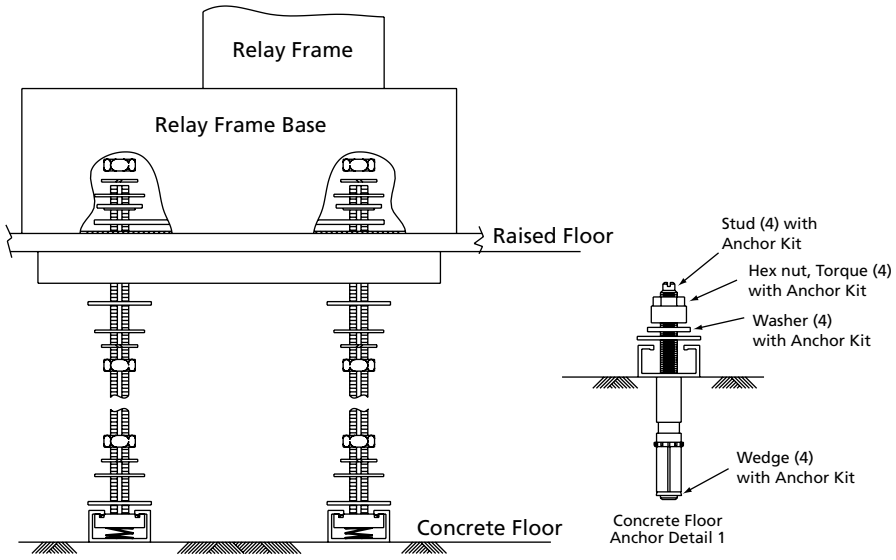

Underfloor Mounting Kit

Ordering information follows on the next page.

Frame Installation Kit

Frame installation kits may be used on network frames and are seismic zone 4 rated.

Ordering Information

Description	Catalog Number
Frame installation kit for 2.14 m (7') frames, includes; 1 floor mounting kit 1 top attachment kit for 2.14 m (7') frames 12 frame tie brackets kits 1 frame ground kit for 2.14 m (7') frames	RINST-DSX7-PW
Frame installation kit for 2.74 m (9') and 3.51 m (11.5') frames, includes; 1 floor mounting kit 1 top attachment kit for 2.74 m (9') and 3.51 m (11.5') frames 22 frame tie brackets kits 1 frame ground kit for 2.74 m (9') and 3.51 m (11.5') frames	RINST-DSX9-PW
Universal anchor kit, for all UEF frames includes; 4 anchor assemblies 2 universal hold down bars 8 anchor plate washers 8 shim plates 2 mm (0.063") 4 shim plates 3 mm (0.125")	RINST-FLR
Isolation Pad accomodates: 1 UEF 23" network frame 2 end guards 2 interbay management panels	FDF-ISOTEMPLATE
Underfloor mounting kit	
1/2" threaded rod	RINST-DSXRFL-PW
5/8" threaded rod	FDF-ACC146

8-Inch FCM Optical Distribution Frame

Frame Accessories

Horizontal Cable Trough

Lower horizontal cable troughs are always included with fiber frames. They can be purchased separately for special applications.

The upper cable trough is not a standard part of the frame. It should be used in applications in which patch cords need to be brought from the front of the frame to the rear. The upper cable trough is putty white and mounts at the top of the frame. Bend radius limiters are provided on the edges of the trough to maintain minimum bend radius requirements.

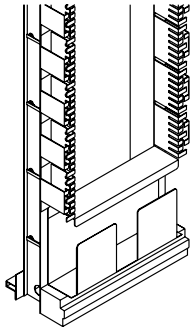

356 mm (14")
Lower Cable Trough
(E-501-L136 Shown)

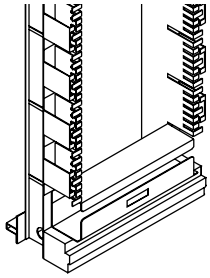

152 mm (6")
Lower Cable Trough
(E-501-L73 Shown)

Ordering Information

Description	Catalog Number
Lower horizontal cable trough	
152 mm x 584 mm x 127 mm (6"H x 23" W x 5" D)	E-501-L73
203 mm x 584 mm x 127 mm (8"H x 23" W x 5" D)	FDF-ACC-LHCT
336 mm x 584 mm x 127 mm (14"H x 23" W x 5" D)	E-501-L136
406 mm x 584 mm x 127 mm (16"H x 23" W x 5" D)	FDF-ACC-LDCT
Upper horizontal cable trough with pass through capability 102 mm x 584 mm x 127 mm (4" H x 23" W x 10" D)	E-501-L514

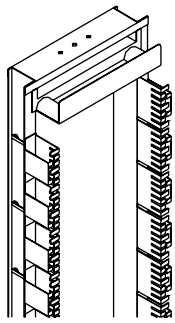

102 mm (4")
Upper Cable Trough
(E-501-L514 Shown)

Frame Filler Plate

Frame filler plates are recommended for use on both sides of a splice frame. The frame filler plates are putty white and come with a guard box.

Ordering Information

Description	Catalog Number
Frame filler plates; putty white, with guard box	
2.14 m x 127 mm x 305 mm (7' H x 5" W x 12" D)	7RFP-5NPW
2.76 m x 127 mm x 305 mm (9' H x 5" W x 12" D)	9RFP-5NPW
3.51 m x 127 mm x 305 mm (11.5' H x 5" W x 12" D)	115RFP-5NPW

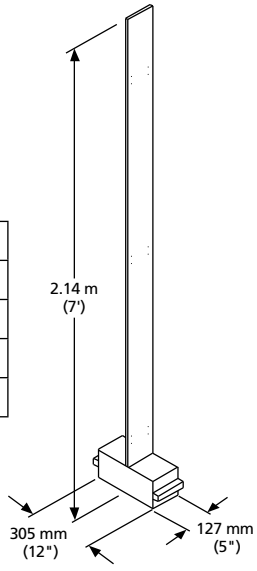

Frame Filler Plate

AC Outlet Kit and Raceway

The AC outlet kit provides the hardware for mounting AC power outlets on the frame. Each kit includes a prewired AC power outlet strip that mounts at the bottom of the frame. Raceways for routing the power wires to the outlet strip are also available.

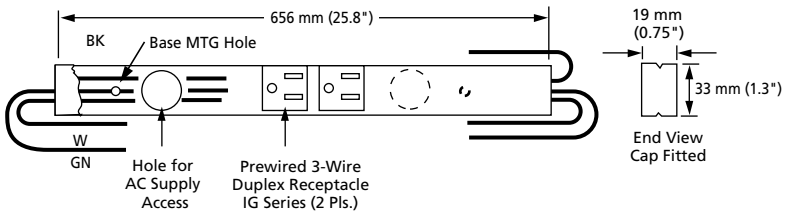

AC Outlet Kit

Ordering Information

Description	Catalog Number
AC outlet kit	ACOK-PWNB
AC raceway	
656 mm (25.8"); used for frames which do not require AC power	ACB-PWNB
127 mm (5"); used with AC outlet kit when frames are spaced 127 mm (5")	AC-PWNB-RS5*

* This raceway must be ordered with each interbay management panel when an AC outlet is ordered.

Rack Extenders

This accessory is designed to extend the top of a 7-foot non-seismic UEF rack to the appropriate height overhead.

Ordering Information

Description	Catalog Number
12"H Network-style rack extender, WECO, PW	RAC-0X0337
24"H Network-style rack extender, WECO, PW	RAC-0X0229
54"H Network-style rack extender, WECO, PW	RAC-0X0230
56"H Network-style rack extender, WECO, PW	RAC-0X0338

8-Inch FCM Optical Distribution Frame

Frame Accessories

Grounding Kit

The fiber distribution frame is equipped with a grounding kit designed with mechanical (clamps, straps, connectors) fittings. Order this kit only if you are building a frame using your own frame. When connecting frame ground to office ground conductor, an H-TAP bonding kit should also be ordered.

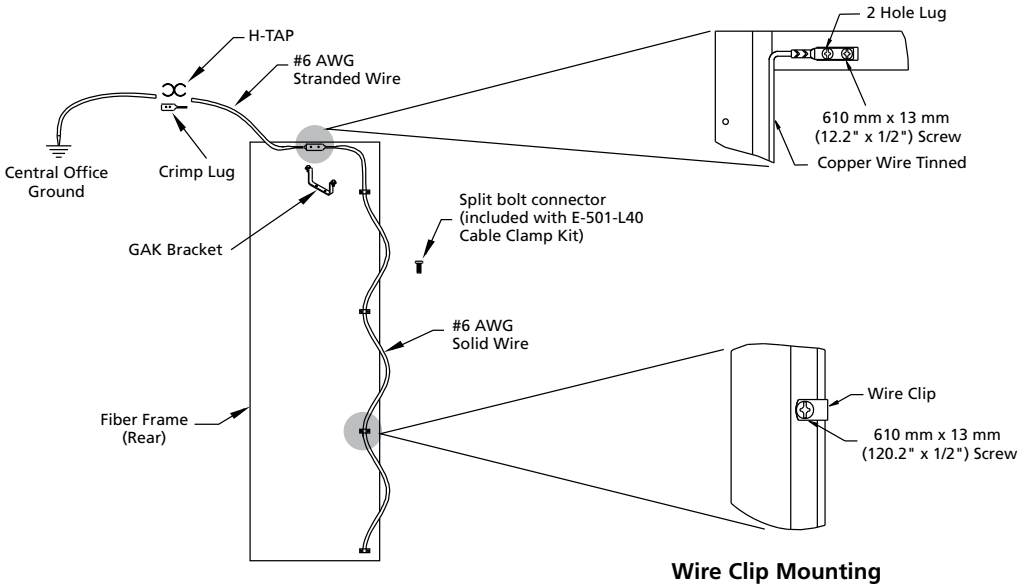

Grounding Kit Accessories

Wire Clip Mounting

Grounding kit includes:

2 hole terminal lug	1 each
#6 AWG copper tinned wire	13'
Wire clips	8 each
#12-24 x 1/2" screws	10 each

H-TAP bonding kit includes:

H-TAP	1 each
H-TAP insulated cover	1 each
2 hole terminal lug, crimp	3 each
Terminal lug, screw	4 each
#6 AWG stranded insulated wire	2'
Star washer	6 each
No-ox grease	1 tube

GAK grounding kit includes:

Bracket	1 each
Clamping bolt	2 each
Nut	2 each
Screw	10 each
Wire Clip	8 each
#6 AWG solid copper tinned wire	13'

Ordering Information

Description	Catalog Number
Grounding kit	E-501-L37*
H-TAP bonding kit	E-501-L166
GAK grounding kit	GAK

* Included with ADC's 8-inch FCM fiber frame

8-Inch FCM Optical Distribution Frame

Panel Accessories

Vertical Cable Guide (VCG) Kit

There are times when a single panel must be mounted in a frame without a cable management system. An individual 8-inch VCG kit is available to manage patch cords when mounting a panel in a 23-inch frame.

Ordering Information

Description	Catalog Number
VCG kit; Contains two 203 mm (8") front vertical cable guides and screws	FDF-ACC145

Blank Panel

The blank panel occupies one panel space in either a front load or rear load frame.

Ordering Information

Description	Catalog Number
Blank panel, 203 mm (8") H	E-501-L39

Cable Clamp Kit and Dual Cable Clamp Plate Kit

The cable clamp kits provide a means of securing the end of an outside plant (OSP) or intrafacility cable (IFC) to the cable plate. Cable diameters must be between 10 mm to 31 mm (0.4 to 1.2-inch). Additional components are included with the OSP clamp kit for grounding metallic parts of the cable such as metallic strength members or metallic sheaths.

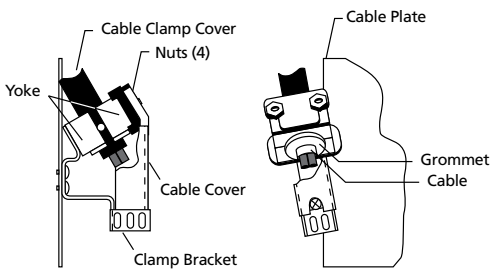

Cable Clamp Kit

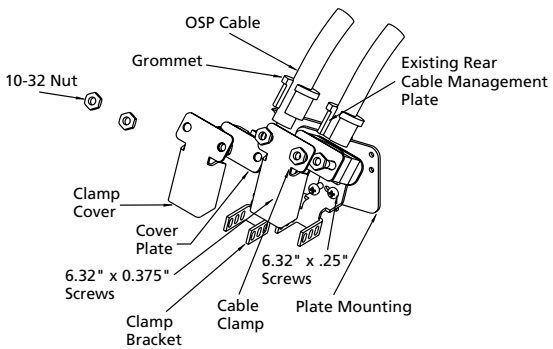

Dual Cable Clamp Plate Kit

Ordering Information

Description	Cable Outer Diameter Supported	Catalog Number
8" FCM cable clamp kit for IFC and OSP cable	10 mm – 31 mm (0.4" – 1.2")	E-501-L40
8" FCM dual cable clamp plate kit doubles the number of clamping positions on the frame from 32 to 64; *kit includes plate only*	–	E-501-L41

8-Inch FCM Optical Distribution Frame

Panel Accessories

Assembled Splice Tray and Chip

Each 8-inch FCM splice panel has eight splice drawers capable of holding up to two single 12-position splice trays or one dual 24-position splice tray for a total of 192 fibers when splicing individual fibers or 384 fibers when performing mass fusion splicing with ribbon fibers.

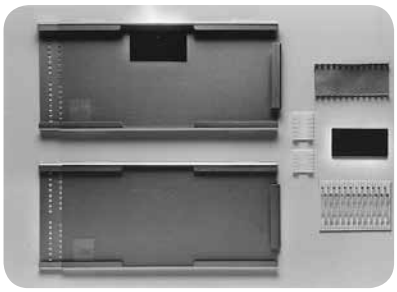

Single and Dual Splice Trays

Ordering Information

Description	Number of Splices per Tray	Number of Splice Trays per Drawer	Splice Panel Capacity	Catalog Number
12-position splice tray, single height				
Bare fusion	12	2	192	FST-FT
Heat shrink (single fiber fusion)				FST-HS
Mechanical				FST-MT
24-position splice tray, dual height				
Bare fusion	24	1	192	FST-D-FT
Heat shrink (single fiber fusion)				FST-D-HS
Mechanical (mass fusion)				FST-D-MT

Splice Protector Sleeve

The splice protector sleeve is constructed to protect a splice after fusion. It is made from heat shrinkable material and contains a built-in strength member for physical protection of the fusion splice. The splice protector sleeve is placed on the fiber before making a splice, moved over the splice when the splice fusion is complete and shrunk into place. They are available in either single fusion or mass fusion sleeves.

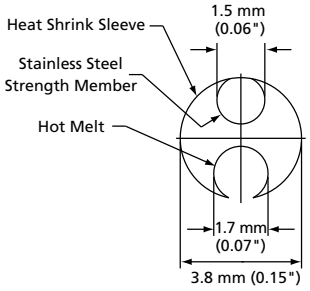

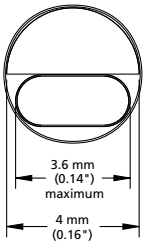

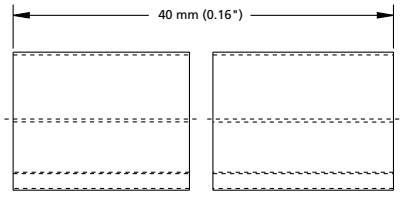

Mass Fusion Splice Protector Sleeve
(FST-ACC006 Shown)

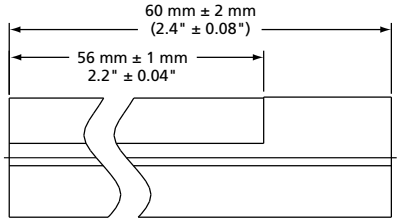

Single Fusion Splice Protector Sleeve
(FST-ACC001 Shown)

Ordering Information

Description	Catalog Number
Splice protector sleeve for	
Single fiber – single fusion; 60 mm (2.4") length, 1 each	FST-ACC001
Single fiber – single fusion; 40 mm (1.6") length, 1 each	FST-ACC005
12-fiber ribbon – mass fusion – heat shrink; 40 mm (1.6") length, 1 each	FST-ACC006

Standard Cross-Connect Patch Cord Lengths

Number of Frames	Approximate Patch Cord Length Meters (Feet)
1	5 m (16.4')
2	6 m (19.7')
3	6 m (19.7')
4	7 m (23')
5	8 m (26.2')
6	9 m (29.5')

For recommended cross-connect methods, refer to FCM user manual ADCP-90-140.
For installation instructions for the 8-inch FCM, refer to user manual ADCP-90-113.

Ordering Information for Patch Cords and Attenuators

ADC offers a comprehensive line of cable assembly and accessory products including patch cords, IFC assemblies, attenuators, FasTerm® connectors and adapters to meet the demanding needs of today's network. Please refer to the **Fiber Cable Assemblies Catalog #102880AE** at www.adc.com for more detailed information. For your convenience, ordering information for patch cords and attenuators can also be found on pages 103–108.

LSX Optical Distribution Frame
Introduction

Frame

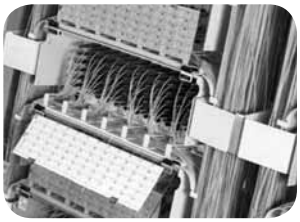

ADC's LSX solution is designed to fit a variety of termination, splice and storage applications. Each frame option is built to industry standards to ensure commonality with patch cord routing, slack storage and fiber protection. The frame is shipped complete with front cable management, top and bottom troughs.

Termination Panel

The LSX termination panel is available with multiple adapters in configurations of 72, 96, 144 and higher and can be ordered with adapters only or preterminated with either intrafacility (IFC), outside plant (OSP) cables or pigtails for ease of installation.

Splice Panel

ADC's splice panel protects splices of multiple splice types.

Value-Added Module (VAM) Chassis

Adding signal management and enhancement functions, such as splitters, couplers and wavelength division multiplexers, optimizes the value of your fiber network, by providing nonintrusive access to the optical signal for monitoring and testing signal integrity. The LGX® compatible VAM chassis accommodates various splitter and WDM modules.

Product Overview

Recommended applications	Small to medium fiber count applications. Minimal cable management features. Lowest cost solution.
Description	LGX* compatible
Number of fibers, future growth potential	Up to 5,000
Interconnect	Good
Cross-connect	Good, no rear cable management
Accommodates on-frame splicing	Good
Accommodates off-frame splicing	Good
Rear access	Must have full access to front and rear
Density – terminations per frame	1,008 terminations per frame
Front access to rear connector	No
VAM capabilities	Yes
Slack storage location	Utilizes drip loop method
Connector access	Straight adapter

*LGX is a registered trademark of Furukawa Electric North America.

LSX Optical Distribution Frame

Things to Consider When Ordering

How to Order

Main Components of the LSX Frame	Catalog Number	Quantity
1) Select desired Frame		
– High-Density LSX 288 Frame – Page 71-73		
– Traditional LSX Universal Frame – Page 74	_____	_____
2) Select desired Fiber Termination Panels		
– Preterminated Fiber Termination Panels with Multifiber Cable-IFC – Page 75	_____	_____
– Adapter-Only Fiber Termination Panels – Page 76	_____	_____
– Preterminated Fiber Termination/Splice Panels – Page 77	_____	_____
Optional Equipment		
3) Value-Added Module (VAM) Chassis – Page 80	_____	_____
4) Frame Installation Kit – Pages 81 - 82	_____	_____
5) Interbay Management Panel – Page 83	_____	_____
6) End Guard – Page 83	_____	_____
7) AC Outlet Kit and Raceway – Page 84	_____	_____
8) Rack Extenders – Page 84	_____	_____
9) Cable Clamp Kit – Page 85	_____	_____
10) Cable Ring Kit – Page 85	_____	_____
11) Patch Cord/In-Line Attenuator – Pages 103 - 108*	_____	_____

Use the following frames for applications requiring high density panels (288 terminations):

	12" D Footprint			15" D Footprint		
	Rack	Interbay Panel	End Guard	Rack	Interbay Pnl	End Guard
7' Racks	PWUEF-7ER1N	E-501-L139	UEGP-7PW	RAC-7A0160	E-501-L139-HD	RAC-7B0162
8' Racks	PWUEF-8ER1N	E-501-L201	UEGP-8PW	RAC-8A0010	N/A	RAC-0B0208
9' Racks	PWUEF-9ER1N	E-501-L142	UEGP-9PW	RAC-9A0465	E-501-L627	RAC-9B0209
11' 6" Racks	PWUEF-115ER1N	E-501-L143	UEGP-115PW	RAC-1A0466	N/A	RAC-1B0210

*See page 85 for standard cross-connect patch cord lengths.

LSX Optical Distribution Frame

High-Density Distribution Frame Solution (using 288-Termination-Only panel)

Density Recommendations

Panels/Frame	Terminations/Frame	Recommended Maximum Frame Lineup	Patch Cord Diameter
5	1,440	4 frames (5,760 terminations)	2.0 mm
6	1,728	3 frames (5,184 terminations)	1.7 mm

Recommended Patch Cord Lengths

Number of Frames	Approximate Patch Cord Length
1	5 m (16.4')
2	6 m (19.7')
3	6 m (19.7')
4	7 m (23')

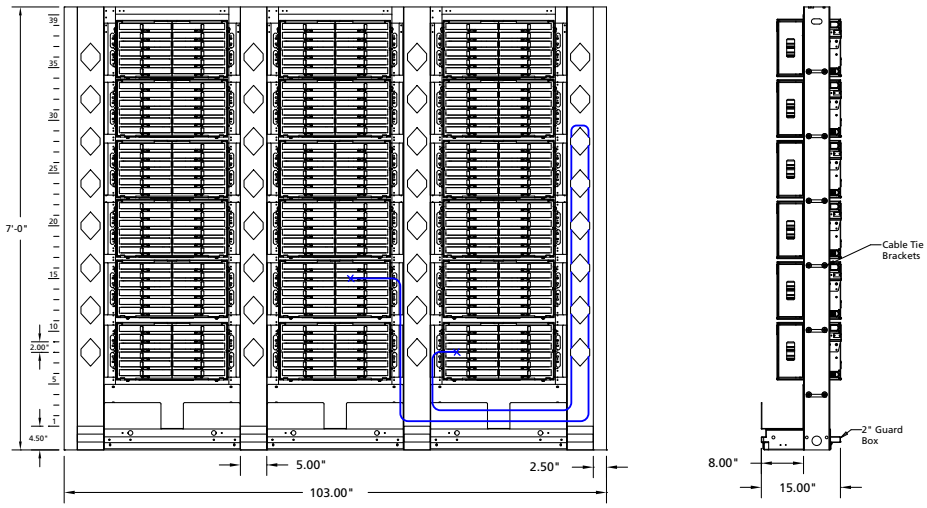

ADC's recommended fiber frame lineup uses three frames with 1.7 mm fiber jumpers to maintain the industry standard 2-inch patch cord pile-up

The preterminated LSX-288 solution utilizes a traditional frame designed to fit a variety of termination, splice and storage applications. This front load frame is built to ensure commonality with patch cord routing, slack storage and fiber protection. Available accessories include panels, lower trough, interbay management panels (IMPs) and end guards.

Ordering Information

Description	Dimensions (H x W x D)	Catalog Number
Empty Rack-WECO 7" network non-seismic rack, front 8"D GB, (39) 2.00" WECO mtg. spaces	660 mm x 381 mm (26" x 15")	RAC-7A0160
Lower horizontal cable trough	203.2 mm x 203.2 mm (8" x 8")	E-501-11115
15"D Interbay Management Panel, 8"D spools, overhead/under floor access	2.1 m x 127 mm x 381 mm (7' x 5" x 15")	E-501-L139-HD
15"D End Guard-Universal-style end guard	2.1 m x 64 mm x 381 mm (7' x 2.5" x 15")	RAC-7B0162

Panel ordering information can be found on pages 75-79.

LSX Optical Distribution Frames

High-Density Distribution Frame Solution (using 288-Termination/Splice panel)

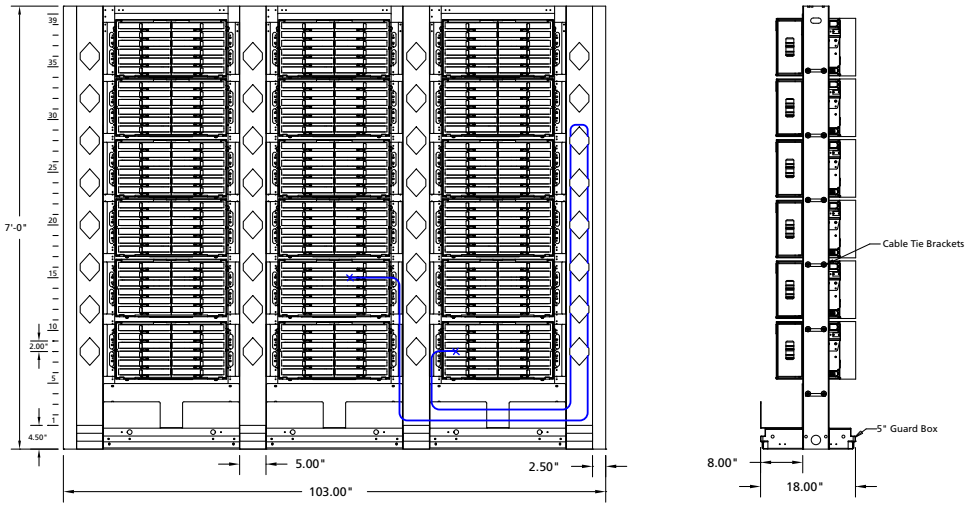

ADC's recommended fiber frame lineup uses three frames with 1.7 mm fiber jumpers to maintain the industry standard 2-inch patch cord pile-up

The termination and splice LSX-288 solution utilizes a traditional frame designed to fit a variety of termination, splice and storage applications. This front load frame is built to ensure commonality with patch cord routing, slack storage and fiber protection. Available accessories include panels, lower trough, interbay management panels (IMPs) and end guards.

Ordering Information

Description	Dimensions (H x W x D)	Catalog Number
Empty Rack-WECO 7' network non-seismic rack, front 8"D GB, (39) 2.00" WECO mtg. spaces	2.1 m x 660 mm x 381 mm (7' x 26" x 15")	RAC-7A0160
Lower horizontal cable trough	203.2 mm x 203.2 mm (8" W x 8" D)	E-501-11115
5"D x 26'W Rear Guard Box	660 mm x 127 mm (26" W x 5" D)	RAC-0X0439
15"D Interbay Management Panel, 8"D spools, overhead/under floor access	2.1 m x 127 mm x 381 mm (7' x 5" x 15")	E-501-L139-HD
5" Rear Guard Box	127 mm x 127 mm (5" W x 5" D)	RAC-0X0440
15"D End Guard-Universal-style end guard	2.1 m x 64 mm x 381 mm (7' x 2.5" x 15")	RAC-7B0162
3" Universal End Guard Extender	2.1 m x 64 mm x 76 mm (7' x 2.5" x 3")	E-501-12002

LSX Optical Distribution Frames

Homerun Splitter Solution (using 288-position panel)

ADC's homerun splitter solution incorporates the LSX 288-position distribution panel along with plug and play splitter modules for central office/headend splitting. Able to effectively manage 1,152 homes within a seven-foot frame, this solution offers excellent density with ADC's built-in cable management. In addition, these same plug and play splitter modules are commonly used within ADC's outdoor Fiber Distribution Hubs (FDHs), allowing for easy-to-manage inventory with one splitter type versatile enough for both inside and outside environments.

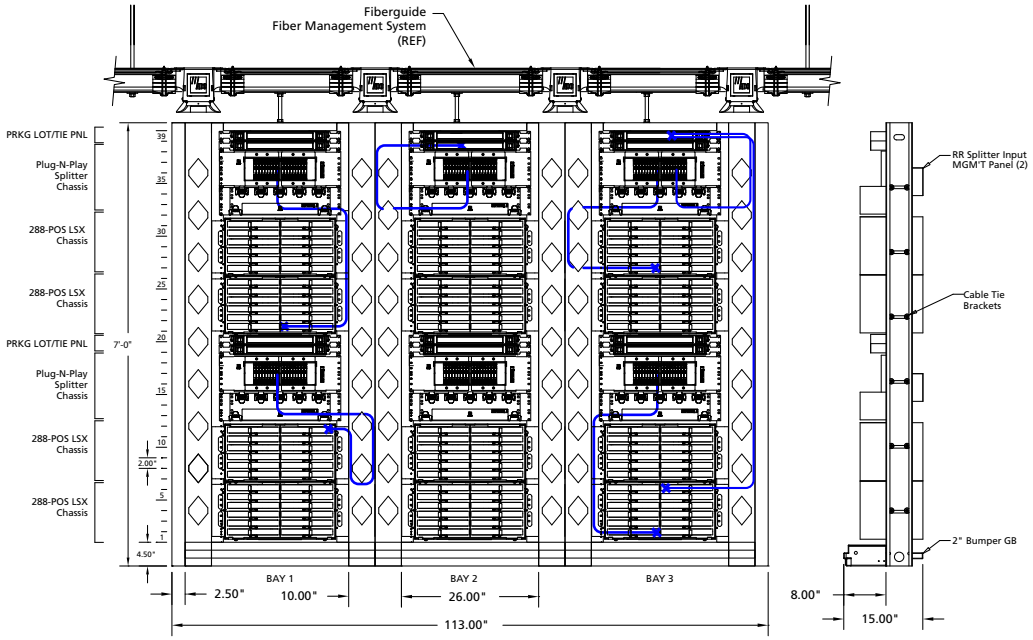

Ordering Information

Description	Dimensions (H x W x D)	Catalog Number
Empty Rack-WECO – 7" network non-seismic rack, front 8"D GB, (39) 2.00" WECO mtg. spaces	2.14 m x 660 mm x 381 mm (7' x 26" x 15")	RAC-7A0160
15" D Interbay Management Panel	2.1 m x 127 mm x 381 mm (7' x 5" x 15")	E-501-L139-HD
15" D Universal-Style End Guard	2.1 m x 64 mm x 381 mm (7' x 2.5" x 15")	RAC-7B0162
Plug-and-Play Splitter Chassis and Accessories		
Rack Mount Chassis and Management Kit – 24-position rack mount splitter chassis. Front and rear cable management	311.15 mm x 482/584 mm (12.25" x 19"/23")	FPS-MPPRACKMTKT
SC/APC PNP 1x32 Splitter – Mini PNP splitter module plug-in. Single 1x32 standard, 54" pigtail length		FPS-MPP1AJJ
32-Position Tie Panel – 1.75" H term-only panel with SC/APC adapters	44.45 mm x 482/584 mm (1.75" x 19"/23")	FMT-DRT0J0A00-A32P
Parking Lot 1.75" H for pigtail parking	44.45 mm x 482/584 mm (1.75" x 19"/23")	FMT-DPK000000-A00P
19"/23" 2 RU Parking Lot	89 mm x 482/584 mm (3.5" x 19"/23")	ACE-ACC200-PKLT3

LSX 288 termination/splice applications require guard box and end guard extenders. See termination/splice ordering information on page 72 for details.

Other configurations are available upon request. Please contact ADC Technical Assistance Center.

4/11 • 1037742AE

LSX Optical Distribution Frames

Traditional LSX Universal Fiber Distributing Frame Solution

The traditional LSX universal frame provides the framework for managing a cross-connect or interconnect fiber system. **Use this frame for applications requiring lower density panels (12-144 terminations).**

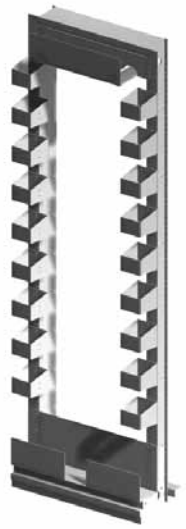

E-501-LGX
(Includes Cable Rings)

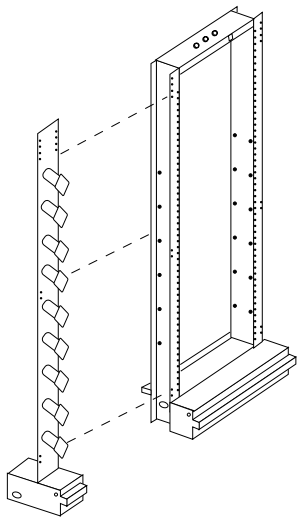

E-501-L139-A

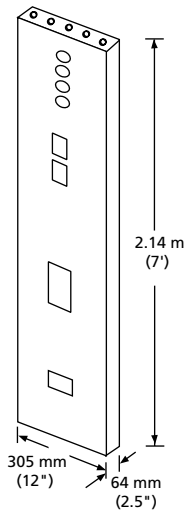

UEGP-7PW

Ordering Information

Description	Dimensions (HxWxD)	Catalog Number
Traditional LSX universal frame; Putty white (Include anchor bolts for concrete floors)	2.14 m x 584 mm x 305 mm (7' x 23" x 12")	E-501-LGX
Interbay management panel (IMP)	2.14 m x 127 mm x 305 mm (7' x 5" x 12")	E-501-L139-A
End Guard (mounts on an IMP or network frame)	2.14 m x 64 mm x 305 mm (7' x 2.5" x 12")	UEGP-7PW

Definition of Variables *(Please find the Ordering Information on the next page)*	
1	**Connector and Adapter Type #1** Specific adapter/connector type required at the LSX
2	**Connector Type #2** Specific connector type required at the far end opposite the LSX
3	**Cable Type** Type of cable to be terminated to the LSX
4	**Cable Length** Required length of the cable terminated to the LSX

LSX Optical Distribution Frame

Preterminated Fiber Termination Panels with Multifiber Cable

The LSX panel can be loaded with intrafacility cable (IFC). The panel adapts to 19- or 23-inch rack mounting, WECO or EIA spacing. The 288-position panel can only be mounted in a 23-inch rack.

Catalog Number

LSX- _ _ / _ _ _ _ _

Panel Type

1	12-position (1.75" H)
1	24-position (1.75" H)
2	48-position (3.5" H)
6	72-position (7" H)
7	96-position (7" H)
T	144-position (9" H)
L	288-position (11" H)

Connector and Adapter Type #1

Singlemode	
7	SC ultra polish
L	SC angled polish
2	FC ultra polish
K	LC ultra polish (144 and 288 only)[3]
M	LC angled polish (144 and 288 only)[3]
Multimode (50/125 µm) Aqua	
T	SC
C	LC (144 and 288 only)[3]

Connector and Adapter Type #2

Singlemode	
0	No connector/stub end
7	SC ultra polish
L	SC angled polish
2	FC ultra polish
K	LC ultra polish
M	LC angled polish
Multimode (50/125 µm) Aqua	
0	No connector/stub end
T	SC
C	LC

Cable Length[1]

Standard Single-Ended	
016	16 m (50')
023	23 m (75')
031	31 m (100')
046	46 m (150')
061	61 m (200')
077	77 m (250')
092	92 m (300')
122	122 m (400')
153	153 m (500')
Non-Standard	
XXX	Use XXX for length in meters

Cable Type[2]

Singlemode IFC Riser	
HD	12-fiber stranded
HC	12-fiber ribbon[5]
HB	24-fiber stranded
HA	24-fiber ribbon[5]
2	48-fiber stranded
JA	48-fiber ribbon[5]
ZB	72-fiber stranded
DS	72-fiber ribbon[5]
ZC	96-fiber stranded
LA	96-fiber ribbon[5]
ZD	144-fiber stranded
LH	144-fiber ribbon[5]
WB	288-fiber stranded (2x144-fiber)
WA	288-fiber ribbon (2x144-fiber)
Multimode (50/125 µm) LOMMF 300 m	
VL	96-fiber stranded
VM	144-fiber stranded
VR	288-fiber stranded (2x144-fiber)
OSP[4]	
HG	12-fiber stranded
HK	12-fiber ribbon[6]
HH	24-fiber stranded
HL	24-fiber ribbon[6]
HJ	48-fiber stranded
HM	48-fiber ribbon[6]
T5	72-fiber stranded
GE	72-fiber ribbon[6]
T6	96-fiber stranded
GA	96-fiber ribbon[6]
T7	144-fiber stranded
GT	144-fiber ribbon[6]
WD	288-fiber stranded (2x144-fiber)
WC	288-fiber ribbon (2x144-fiber)[6]

[1] Panels using ADC's standard cable offering have a shorter lead time than panels using a specific cable manufacturer. ADC only provides GR-409 compliant cable that meets or exceeds our high quality standards. House cable vendors include Alcatel, Berk-Tek, Corning, and Prysmian.

[2] Standard cable exit direcction is upward.

[3] LC does not double the density of the LSX panel.

[4] All OSP cables are dielectric.

[5] See pages 97-98 to configure breakout kits for configuration using stubbed IFC ribbon cable.

[6] See pages 94-95 to configure Ribbon Central Tube breakout kits.

Other configurations are available upon request.
Please contact ADC Technical Assistance Center.

4/11 • 103742AE

LSX Optical Distribution Frame

Adapter-Only Fiber Termination Panels

The LSX panel has the same mounting dimensions as an LGX® compatible panel.

Ordering Information

Number of Terminations	Adapter Type	Catalog Number
12 44 mm (1.75") height	**Singlemode**	
	SC ultra polish	LSX-170000-12
	SC angled polish	LSX-1L0000-12
	FC ultra polish	LSX-120000-12
	Multimode (50/125 µm) Aqua	
	SC	LSX-1T0000-12
24 44 mm (1.75") height	**Singlemode**	
	SC ultra polish	LSX-170000
	SC angled polish	LSX-1L0000
	FC ultra polish	LSX-120000
	Multimode (50/125 µm) Aqua	
	SC	LSX-1T0000
48 89 mm (3.5") height	**Singlemode**	
	SC ultra polish	LSX-270000
	SC angled polish	LSX-2L0000
	FC ultra polish	LSX-220000
	Multimode (50/125 µm) Aqua	
	SC	LSX-2T0000
72 178 mm (7") height	**Singlemode**	
	SC ultra polish	LSX-670000
	SC angled polish	LSX-6L0000
	FC ultra polish	LSX-620000
	Multimode (50/125 µm) Aqua	
	SC	LSX-6T0000
96 178 mm (7") height	**Singlemode**	
	SC ultra polish	LSX-770000
	SC angled polish	LSX-7L0000
	FC ultra polish	LSX-720000
	Multimode (50/125 µm) Aqua	
	SC	LSX-7T0000
144 228 mm (9") height	**Singlemode**	
	SC ultra polish	LSX-T70000
	SC angled polish	LSX-TL0000
	FC ultra polish	LSX-T20000
	LC ultra polish[1]	LSX-TK0000
	LC angled polish[1]	LSX-TM0000
	Multimode (50/125 µm) Aqua	
	SC	LSX-TT0000
	LC[1]	LSX-TC0000
288 279 mm (11")height	**Singlemode**	
	SC ultra polish	LSX-L70000
	SC angled polish	LSX-LL0000
	FC ultra polish	LSX-L20000
	LC ultra polish[1]	LSX-LK0000
	LC angled polish[1]	LSX-LM0000
	Multimode (50/125 µm) Aqua	
	SC	LSX-LT0000
	LC[1]	LSX-LC0000

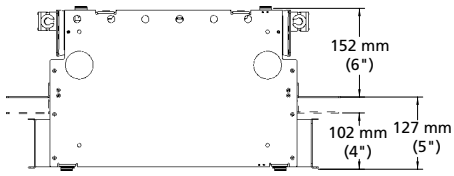

LSX Panel
(Top View)

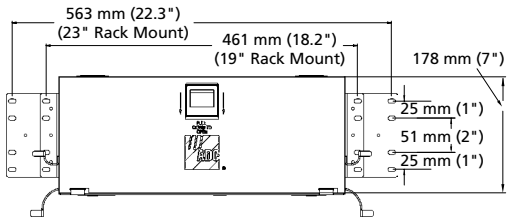

72- or 96-Position Panel
(Front View)

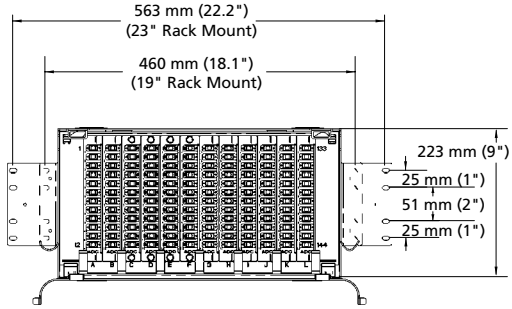

144-Position Panel
(Front View)

[1] LC Connectors do not double the density of the LSX panel

LSX Optical Distribution Frame

Preterminated Fiber Termination/Splice Panels with Pigtails

LSX preterminated fiber termination/splice panels are available with a splicing area integrated into the panel. The 12-, 24-, and 48-position panels are 12-inches deep. The 72-, 96-, 144-, and 288-position panels are 15-inches deep. These panels include a rear flip-down splicing compartment. The panels can be ordered with 12-fiber ribbon or 12-fiber stranded pigtails.

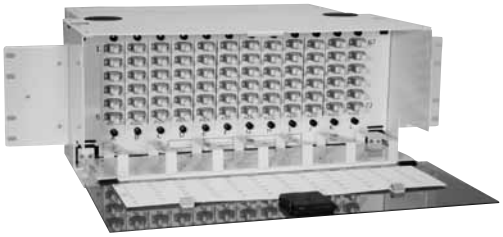

72-Position Termination/Splice Panel

Ordering Information

Number of Terminations	Adapter Type	Loaded with 12-Fiber Ribbon Pigtails	Loaded with 12-Fiber Stranded Pigtails
12 44 mm (1.75") height 12" deep	**Singlemode**		
	SC ultra polish	LSX-175013-A-SPL	LSX-171012-A-SPL
	SC angled polish	LSX-1L5013-A-SPL	LSX-1L1012-A-SPL
	FC ultra polish	LSX-125013-A-SPL	LSX-121012-A-SPL
	Multimode (50/125 µm) Aqua		
	SC	N/A	LSX-1T1012-A-SPL[2]
24 44 mm (1.75") height 12" deep	**Singlemode**		
	SC ultra polish	LSX-175023-A-SPL	LSX-171022-A-SPL
	SC angled polish	LSX-1L5023-A-SPL	LSX-1L1022-A-SPL
	FC ultra polish	LSX-125023-A-SPL	LSX-121022-A-SPL
	Multimode (50/125 µm) Aqua		
	SC	N/A	LSX-1T1022-A-SPL[2]
48 89 mm (5.25") height 12" deep	**Singlemode**		
	SC ultra polish	LSX-375043-A-SPL	LSX-371042-A-SPL
	SC angled polish	LSX-3L5043-A-SPL	LSX-3L1042-A-SPL
	FC ultra polish	LSX-325043-A-SPL	LSX-321042-A-SPL
	Multimode (50/125 µm) Aqua		
	SC	N/A	LSX-3T1042-A-SPL[2]
72 178 mm (7") height 15" deep	**Singlemode**		
	SC ultra polish	LSX-675063-A-SPL	LSX-671062-A-SPL
	SC angled polish	LSX-6L5063-A-SPL	LSX-6L1062-A-SPL
	FC ultra polish	LSX-625063-A-SPL	LSX-621062-A-SPL
	Multimode (50/125 µm) Aqua		
	SC	N/A	LSX-6T1062-A-SPL[2]
96 178 mm (7") height 15" deep	**Singlemode**		
	SC ultra polish	LSX-775083-A-SPL	LSX-771082-A-SPL
	SC angled polish	LSX-7L5083-A-SPL	LSX-7L1082-A-SPL
	FC ultra polish	LSX-725083-A-SPL	LSX-721082-A-SPL
	Multimode (50/125 µm) Aqua		
	SC	N/A	LSX-7T1082-A-SPL[2]

Continued on next page.

LSX Optical Distribution Frame

Preterminated Fiber Termination/Splice Panels with Pigtails (continued)

Ordering Information

Number of Terminations	Adapter Type	Loaded with 12-Fiber Ribbon Pigtails	Loaded with 12-Fiber Stranded Pigtails
144 228 mm (9") height 15" deep	**Singlemode**		
	SC ultra polish	LSX-T75123-A-SPL	LSX-T71122-A-SPL
	SC angled polish	LSX-TL5123-A-SPL	LSX-TL1122-A-SPL
	FC ultra polish	LSX-T25123-A-SPL	LSX-T21122-A-SPL
	LC ultra polish[1]	LSX-TK25123-A-SPL	LSX-TK1122-A-SPL
	LC angled polish[1]	LSX-TM25123-A-SPL	LSX-TM1122-A-SPL
	Multimode (50/125 µm) Aqua		
	SC	N/A	LSX-TT1122-A-SPL[2]
	LC[1]	N/A	LSX-TC1122-A-SPL[2]
288* 279 mm (11") height 15" deep	**Singlemode**		
	SC ultra polish	LSX-L75243-A-SPL	LSX-L71242-A-SPL
	SC angled polish	LSX-LL5243-A-SPL	LSX-LL1242-A-SPL
	LC ultra polish[1]	LSX-LK5243-A-SPL	LSX-LK1242-A-SPL
	LC angled polish[1]	LSX-LM5243-A-SPL	LSX-LM1242-A-SPL
	Multimode (50/125 µm) Aqua		
	SC	N/A	LSX-LT1242-A-SPL[2]
	LC[1]	N/A	LSX-LC1242-A-SPL[2]

[1] LC Connectors do not double the density of the LSX panel
[2] Loaded with 12-fiber laser optimized (300 m) mulitmode pigtails.

*288 Termination /splice panel does not fit 19-inch frames. For 23-inch frames only.

LSX Optical Distribution Frame

Splice Panels

The LSX splice panel has the same mounting dimensions as LGX® compatible panels and consists of six drawers, designation labels and a cover. Maximum splice capacity is 144 when splicing individual stranded fibers or 432 fibers when using ribbon fiber and mass fusion splicing. **The LSX splice panel requires F3DF splice trays.** Each drawer holds twenty-four 900 micron pigtails or twelve 3.0 mm pigtails. Pigtails and cable enter and exit through access ports in the rear of the panel.

Vertical cable guides must be ordered along with the LSX splice panel unless it is mounted into a frame that includes vertical cable guides. If needed, cable clamp kit must be ordered separately (see page 85).

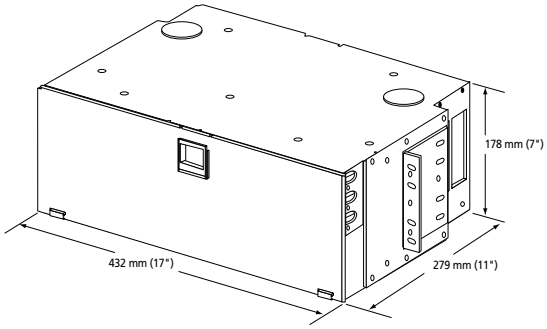

Splice Panel
Shown without Vertical Cable Guides
Ordered Separately
(Front View)

Ordering Information

Description	Catalog Number
LSX splice panel; 483 mm or 584 mm (19" or 23") rack mount	LSX-SPLCA06

LSX Optical Distribution Frame

LGX® Compatible Value-Added Module (VAM) Chassis

The 7-inch LGX® compatible VAM chassis is designed to fit into any open chassis location within new or existing LGX compatible fiber frames. It can accommodate a maximum of 12 plug-in modules, 12 bulkhead plates, 12 blank plates, or any combination thereof. The mounting slots are oriented vertically.

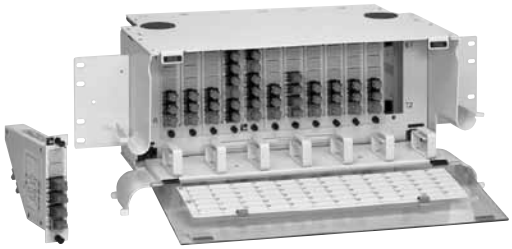

VAM Chassis (FVM-VLM19X700-W)

Ordering Information

Description	Dimensions (HxWxD)	Catalog Number
7" LGX compatible VAM chassis, unloaded, white; VAMs mount vertically; accommodates up to 12 single modules	178 mm x 483 mm/584 mm x 279 mm (7" x 19"/23" x 11")	FVM-VLM19X700-W
9" LGX compatible VAM chassis, unloaded, accommodates (4) 1x32 splitter module	229 mm x 483 mm/584 mm x 279 mm (9" x 19"/23" x 11")	FVM-VLM-19X900-W

The 3.5-inch LGX compatible VAM chassis is designed to fit into any 19- or 23-inch environment. It can accommodate a maximum of 4 plug-in modules, 4 bulkhead plates, 4 blank plates or any combination thereof. The mounting slots are oriented horizontally to allow standard LGX compatible plug-in modules to be used while maximizing density and minimizing rack space allotment.

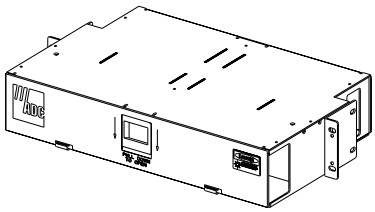

FVM-LGX19X350-W

Ordering Information

Description	Dimensions (HxWxD)	Catalog Number
3.5" LGX compatible VAM chassis, unloaded, white; VAMs mount horizontally; accommodates up to 4 single modules	89 mm x 477 mm x 279 mm (3.5" x 18.8" x 11")	FVM-LGX19X350-W

Value-Added Module (VAM) System

ADC offers an expansive line of monitor, splitter, WDM and CWDM plug-in modules designed to meet all application needs. Please reference the **Value-Added Module (VAM) System Catalog #101663AE** for details at www.adc.com or contact ADC Customer Service.

Outside Plant Splitter System

For outside plant splitter solutions, please reference **OmniReach® FTTX Solutions-Passive Optical Splitter Modules Catalog #102902AE** at www.adc.com or contact ADC Customer Service.

Frame Installation Kit

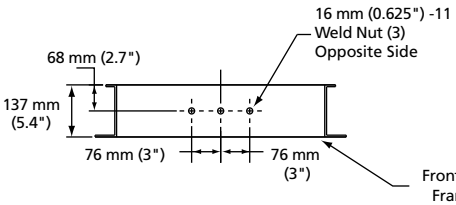

Top Mounting Detail
2.14 m (7')

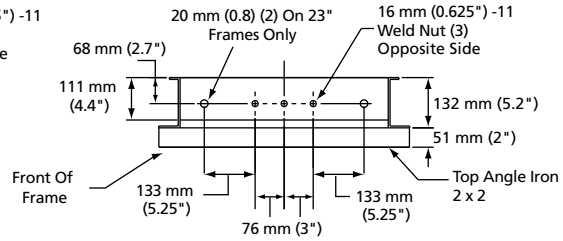

Top Mounting Detail
2.44 m, 2.74 m, 3.51 m (8', 9', 11.5')

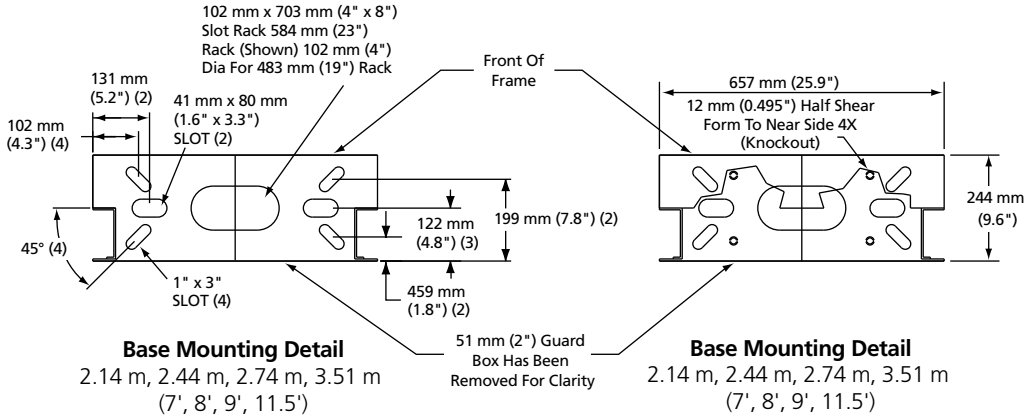

Base Mounting Detail
2.14 m, 2.44 m, 2.74 m, 3.51 m
(7', 8', 9', 11.5')
(Bottom View)

Base Mounting Detail
2.14 m, 2.44 m, 2.74 m, 3.51 m
(7', 8', 9', 11.5')
(Top View)

Network Type Unequal Flange Frame Mounting Details

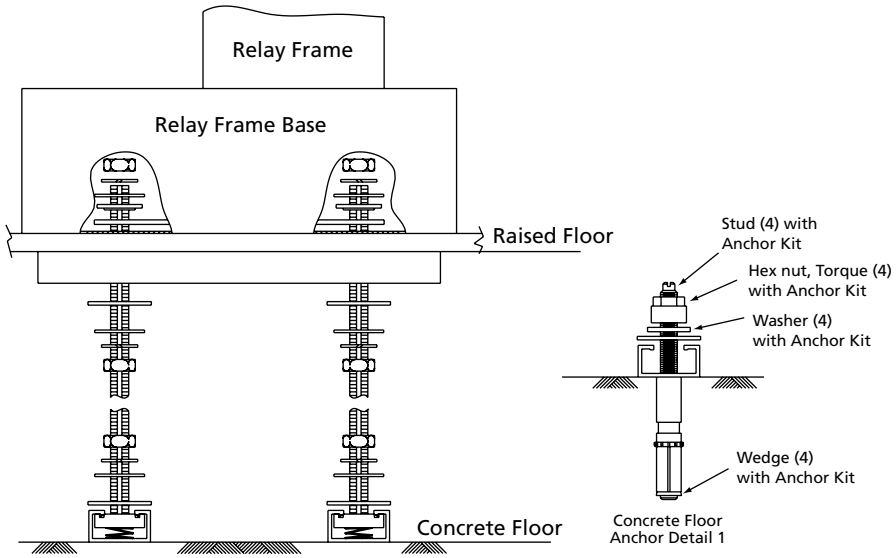

Underfloor Mounting Kit

Ordering information follows on the next page.

Frame Installation Kit

Frame installation kits may be used on network frames and are seismic zone 4 rated.

Ordering Information

Description	Catalog Number
Frame installation kit for 2.14 m (7') frames, includes; 1 floor mounting kit 1 top attachment kit for 2.14 m (7') frames 12 frame tie brackets kits 1 frame ground kit for 2.14 m (7') frames	RINST-DSX7-XX*
Frame installation kit for 2.74 m (9') and 3.51 m (11.5') frames, includes; 1 floor mounting kit 1 top attachment kit for 2.74 m (9') and 3.51 m (11.5') frames 22 frame tie brackets kits 1 frame ground kit for 2.74 m (9') and 3.51 m (11.5') frames	RINST-DSX9-XX*
Universal anchor kit, for all UEF frames includes; 4 anchor assemblies 2 universal hold down bars 8 anchor plate washers 8 shim plates 2 mm (0.063") 4 shim plates 3 mm (0.125")	RINST-FLR
Isolation Pad accomodates: 1 UEF 23" network frame 2 end guards 2 interbay management panels	FDF-ISOTEMPLATE
Underfloor mounting kit	
1/2" threaded rod	RINST-DSXRFL-PW
5/8" threaded rod	FDF-ACC146

*Substitute XX with NB for network blue, PW for putty white.

Interbay Management Panel

Ordering Information

Description	Dimensions (HxWxD)	Catalog Number
Interbay Management Panel (IMP)	2.14 m x 127 mm x 305 mm (7' x 5" x 12")	E-501-L139-A

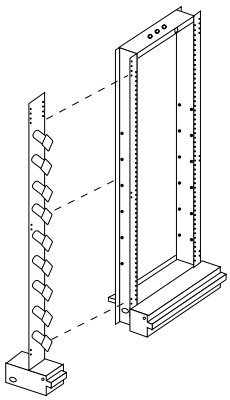

Interbay Management Panel

End Guard

End guards provide protection and a finished appearance at the start and end of frame lineups. They attach to either a frame or an interbay management panel. End guards serve as a mounting place for outlets and switches and are used interchangeable for either left or right applications.

Ordering Information

Description	Catalog Number
End guard Mounts on IMP or network frame 2.14 m x 64 mm x 305 mm (7' H x 2.5" W x 12" D)	UEGP-7PW

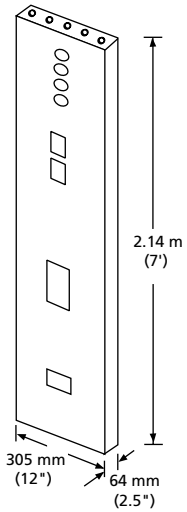

End Guard

AC Outlet Kit and Raceway

The AC outlet kit provides the hardware for mounting AC power outlets on the frame. Each kit includes a prewired AC power outlet strip that mounts at the bottom of the frame. Raceways for routing the power wires to the outlet strip are also available.

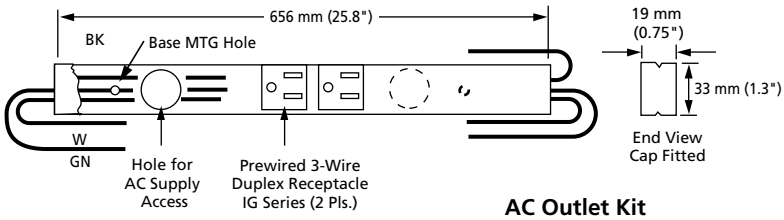

AC Outlet Kit

Ordering Information

Description	Catalog Number
AC outlet kit	ACOK-PWNB
AC raceway	
656 mm (25.8"); used for frames which do not require AC power	ACB-PWNB
127 mm (5"); used with AC outlet kit when frames are spaced 127 mm (5")	AC-PWNB-RS5*

* This raceway must be ordered with each interbay management panel when an AC outlet is ordered.

Rack Extenders

This accessory is designed to extend the top of a 7-foot non-seismic UEF rack to the appropriate height overhead.

Ordering Information

Description	Catalog Number
12"H Network-style rack extender, WECO, PW	RAC-0X0337
24"H Network-style rack extender, WECO, PW	RAC-0X0229
54"H Network-style rack extender, WECO, PW	RAC-0X0230
56"H Network-style rack extender, WECO, PW	RAC-0X0338

LSX Optical Distribution Frame

Panel Accessories

Splice Tray

Each splice tray is purchased separately.

Splice Tray

Ordering Information

Description	Catalog Number
Splice tray; 12 splices per tray Mass fusion ribbon	FST-F3DF-MT-D*
Heat shrink (single fiber fusion)	FST-F3DF-HS
Bare fusion	FST-F3DF-FT
Mechanical (mass fusion)	FST-F3DF-MT
Nortel QPAK	FST-F3DF-NT

* Use only one FST-F3DF-MT-D per splice drawer (24 splices per tray).

Use trays with the LSX splice panel only (page 79). Note: Trays can not be used in preterminated LSX splice panels (pages 77-78). Preterminated LSX splice panels already include splice trays. Additional splice trays for the preterminated panels are listed on page 67.

Cable Clamp Kit and Cable Ring Kit

The cable clamp kit provides a means of securing the end of an OSP or IFC cable to the side of an LSX panel. The cable ring protects and manages jumpers on the frame.

Ordering Information

Description	Catalog Number
Cable clamp kit includes 1 dual bracket and 1 cable clamp	LSX-CBLCLMPKIT
Cable ring kit includes 2 cable rings and appropriate hardware	LSX-ACCVCGKIT

Standard Cross-Connect Patch Cord Lengths

Number of Frames	Approximate Patch Cord Length Meters (Feet)
1	4 m and 6 m (13.1' and 19.7')
2	6 m (19.7')
3	6 m and 7 m (19.7' and 23')
4	7 m and 8 m (23' and 26.2')
5	8 m and 9 m (26.2' and 29.5')
6	9 m (29.5')

For recommended cross-connect methods and installation instructions, refer to LSX User Manual ADCP-93-089.

Ordering Information for Patch Cords and Attenuators

ADC offers a comprehensive line of cable assembly and accessory products including patch cords, IFC assemblies, attenuators, FasTerm® connectors and adapters to meet the demanding needs of today's network. Please refer to the **Fiber Cable Assemblies Catalog #102880AE** at www.adc.com for more detailed information. For your convenience, ordering information for patch cords and attenuators can also be found on pages 103-108.

LSX Optical Distribution Frame

Panel Accessories

Adapter Pack

For loading into an LSX adapter-only panel or VAM chassis.

See VAM catalog 101663AE or OmniReach FTTX Solutions Passive Optical Splitter Modules Catalog #102902AE for empty VAM chassis catalog numbers.

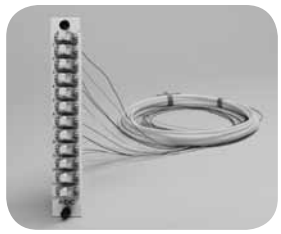

12 Pack
(SC ultra polish adapters shown with pigtails)

Catalog Number

LSX- ___ ___

Adapter Pack Capacity

6P	6 pack for 72-position panel (7"H)
8P	8 pack for 96-position panel (7"H)
12P	12 pack for 144-position panel (9"H)
18P	18 pack for 216-position panel (10"H)

*FC connector style not available

Adapter Type

Singlemode	
7	SC ultra polish
L	SC angled polish
2	FC ultra polish
K	LC ultra polish[1]
M	LC angled polish[1]
Multimode (50/125 µm) Aqua	
T	SC
C	LC[1]

[1] LC Connectors do not double the density of the LSX panel

Cabinet Solutions

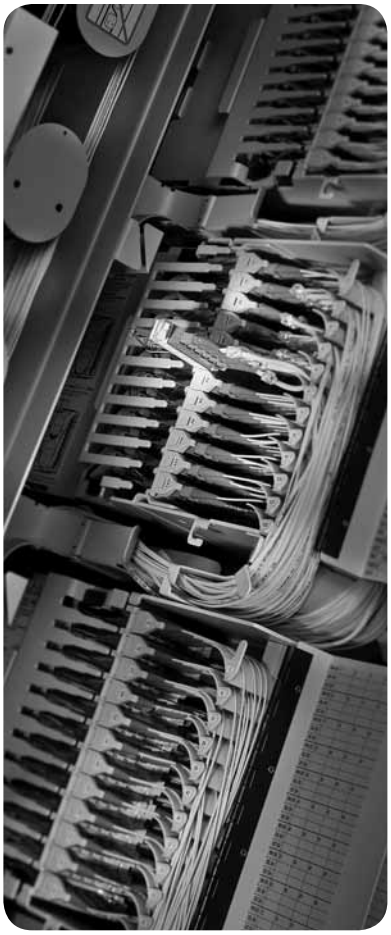

Cabinets 88
Accessories 89

OMX600® Optical Distribution Frame

Fiber Splice Cabinets

The OMX600® splice cabinet is a zone 4 rated, high-density splice solution, housing 1,440 stranded fiber splices and up to 2880 ribbon fibersplices within a 23.6- by 11.8-inch footprint. Shipped complete with the necessary cable management, it features slots which secure and protect the round splice trays and can hold up to sixty 12-fiber splice trays on each vertical. The cabinet is shipped with lockable front doors and may be ordered for applications in which the cables enter from above or below.

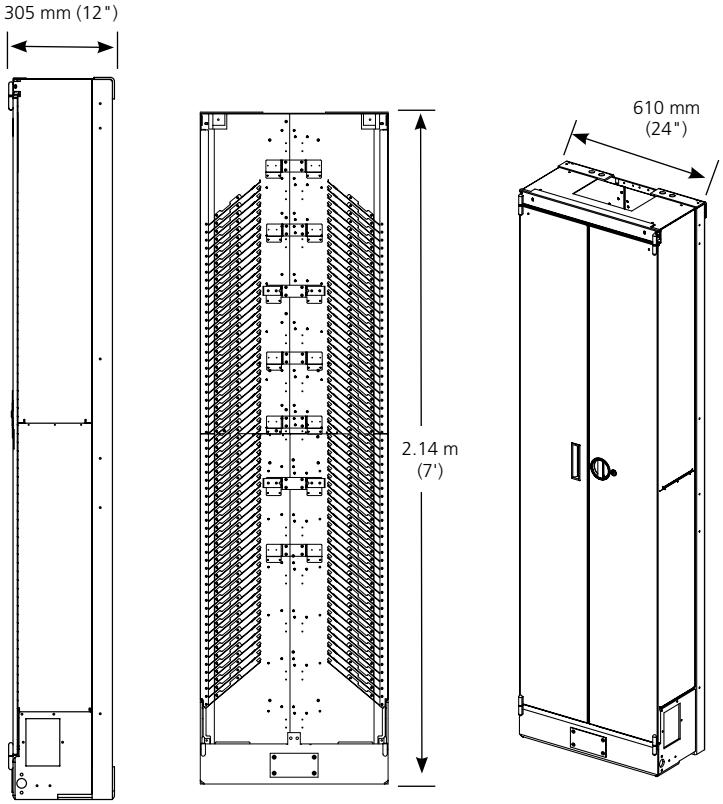

Side View **Front View** **Front ISO View**

OSP Cable Count	Splice Capacity Ribbon
(20) 144 OSP Cables	2,880
(10) 288 OSP Cables	2,880
(6) 432 OSP Cabes	2,592
(6) 432 OSP Cables (2) 144 OSP Cables	2,880
(4) 576 OSP Cables	2,304
(4) 576 OSP Cables (2) 288 OSP Cables	2,880
(2) 864 OSP Cables	1,728
(2) 864 OSP Cables (2) 432 OSP Cables	2,592
(2) 864 OSP Cables (2) 576 OSP Cables	2,880
(2) 864 OSP Cables (2) 432 OSP Cables (2) 144 OSP Cables	2,880

The capacities above are based on 24 splices per round splice tray.

Ordering Information

Description	Dimensions (HxWxD)	Catalog Number
Fully configured splice cabinet* (see above for ribbon splice capacity matrix) Stranded Splice Capacity = 1440 Fibers Ribbon Splice Capacity = 2880 Fibers		
Cable enters from underfloor	2.14 m x 610 mm x 305 mm (7' x 24" x 12")	MX6-SPL6030-A-D7Z4
Cable enters from top		MX6-SPL6030-A-U7Z4
Splice cabinet cable clamps for		
OSP cable		FEC-ACCCLMP01
IFC cable		MX6-SPLIFCCLMP
Isolation Pad for Splice Cabinet. A template for cabinet installation providing isolation between the cabinet and the ground	–	MX6-BAYTEMPLATE

[4] See page 89 for splice tray ordering information.

*See pages 94-98 for ribbon fiber breakout kit ordering information.

OMX600® Optical Distribution Frame

Frame Accessories

Frame Installation Kit

Frame installation kits may be used on network frames and are seismic zone 4 rated.

Ordering Information

Description	Catalog Number
Concrete floor frame installation kit, includes: (2) M8 bolts, 90 mm (3.5") (4) M8 nuts (8) flat washers (4) lock washers shims and anchor plates	RAC-MX0616
Raised floor frame installation kit, includes: (4) threaded rods M12 x 1 m (3.28") (12) heavy nuts, lock and flat washers (4) nuts with springs, M12 (2) 1.8 m (5.9") unistrut (1) anchor kit	RAC-MX0615

Splice Tray

The round splice tray used in the OMX600® simplifies installation and maintenance. The tray stores up to 9.8-feet of slack allowing the installer to roll the tray away from the frame to perform splicing.

Catalog Number

FST-DRS __ __ - __ __

Drawer Capacity

12
16
24
32[1]

Splice Type

00	Empty
FT	Bare fusion
HS	Heat shrink (single fiber fusion)
MT	Mechanical (mass fusion)

[1]For 8-fiber ribbon only

Splice Enclosure Solutions

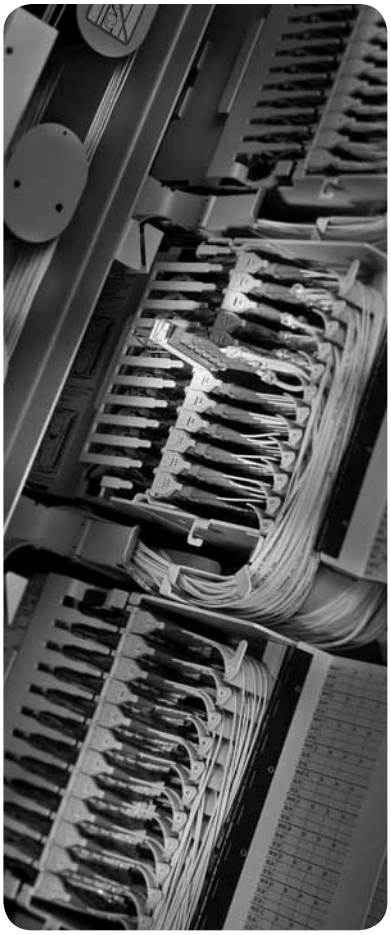

Fiber Entrance Cabinet

Introduction 92
Cabinets 92
Accessories 93

Fiber Entrance Cabinet

Introduction

ADC's fiber entrance cabinet (FEC) provides splicing, administration and storage for outside plant (OSP) and intrafacility cables (IFC). The cabinets are designed for deployment in a building equipment area. The FEC offers a cost-effective, space-saving alternative to splicing on the fiber frame.

Equipped with splice drawers and available in several configurations, the FEC's largest configuration accommodates up to 864 stranded fibers or 2,592 ribbon fibers, with each splice drawer supporting 24 stranded fibers or 72 ribbon fibers. Bend radius protection and discrete subunit routing paths ensure easy access and prevent excess attenuation.

This cabinet accommodates a wide variety of cable types and splicing methods.

Product Overview

Recommended applications	Off-frame splice location for outiside plant (OSP) cables to be spliced to intrafacility (IFC) cable
Description	Accommodates multiple fiber splicing requirements with various cabinet sizes
Cable management	Superior
Routing paths	Clear
Physical protection	Robust
Access splice point	Easy

Cabinet Solutions

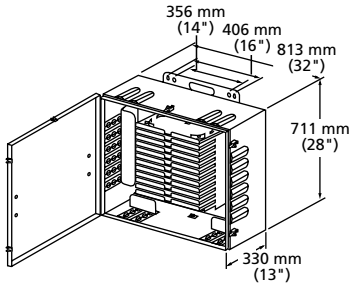

288-Position
- Equipped with 12 drawers
- 288 stranded fiber capacity
- 864 ribbon fiber capacity

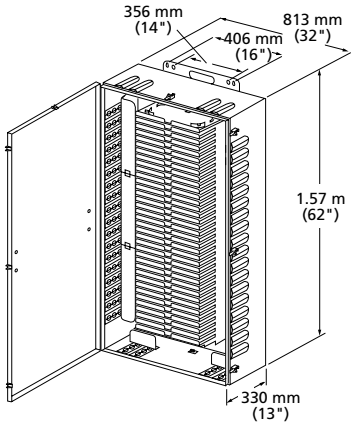

864-Position
- Equipped with 36 drawers
- 864 stranded fiber capacity
- 2,592 ribbon fiber capacity

Ordering Information

Cabinet Size		Number of Drawers included with Cabinet	Weight	Dimensions (HxWxD)	Catalog Number
Stranded Fibers	Ribbon Fibers				
288	864	12	80 lbs (36.3 kg)	711 mm x 813 mm x 330 mm (28" x 32" x 13")	FEC-288
864	2,592	36	160 lbs (72.6 kg)	1.57 m x 813 mm x 330 mm (62" x 32" x 13")	FEC-864

Fiber Entrance Cabinet

Accessories

Cable Clamping Kit

Ordering Information

Description	Catalog Number
IFC/OSP cable clamp kit for wall mount configurations. Secure three cables to a single cable entry point on the cabinet. Clamp kits can be separated and used as single clamps.	
Cables with a maximum diameter of 10 mm (0.4") to 30 mm (1.2")	OSP-CLPFEC-LG
Cables with a maximum diameter of 5 mm (0.2") to 18 mm (0.7")	OSP-CLPFEC
Individual IFC/OSP cable clamp for wall mount configurations. Secure one cable to a single cable entry point on the cabinet.	
Cables with a maximum diameter of 5 mm (0.2") to 18 mm (0.7")	OSP-CLPSST
Individual IFC/OSP cable clamp for rack or wall mount configurations. Secure one cable to a single cable entry point on the cabinet.	
Cables with a maximum diameter of 10 mm (0.4") to 30 mm (1.2")	FEC-ACCCLMP01
Individual soft IFC only cable clamp for wall mount configurations. Secure one cable to a single cable entry point on the cabinet.	
Cables with a maximum diameter of 20 mm (0.8") to 28 mm (1.1")	OSP-CLPSST-IFCL
Cables with a maximum diameter of 5 mm (0.2") to 18 mm (0.7")	OSP-CLPSST-IFCS

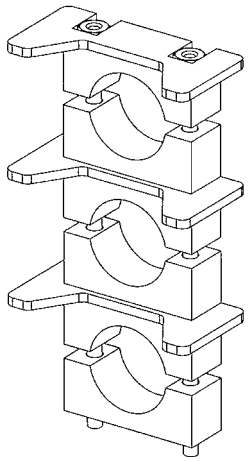

IFC/OSP Cable Clamp Kit
(OSP-CLPFEC-LG Shown)

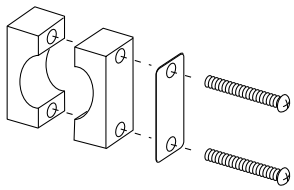

Individual IFC/OSP Cable Clamp
(OSP-CLPSST Shown)

Splice Tray

Standard-style FEC cabinets will accept two single trays or one dual tray per drawer. 24 stranded fibers maximum per drawer, 72 ribbon fibers maximum per drawer.

Ordering Information

Description	Catalog Number		
Standard Splice Trays	**Single Tray (12-position)** 9 mm x 299 mm x 127 mm (0.3" x 11.75" x 5")	**Dual Tray (24-position)** 14 mm x 299 mm x 127 mm (0.5" x 11.75" x 5")	**Splice Sleeve Protector**
Mass fusion ribbon	N/A	FST-D-MT	FST-ACC006
Heat shrink (single fiber fusion)	FST-HS	FST-D-HS	FST-ACC001
Bare fiber	FST-FT	FST-D-FT	FST-ACC001
Mechanical	FST-MT	FST-D-MT	FST-ACC006

4/11 • 103742AE

Breakout Kit for Ribbon in Loose Buffer Tube (RLBT) OSP Cable

Ribbon in loose buffer tube OSP cables are constructed as shown in Figure 1. All RLBT cables feature six subunits surrounding a central strength member. Depending on the fiber count of the cable, some of the subunits may be used as filler subunits (a solid plastic unit without any fiber). Each subunit containing fiber is comprised of six or twelve ribbons featuring 12 fibers per ribbon.

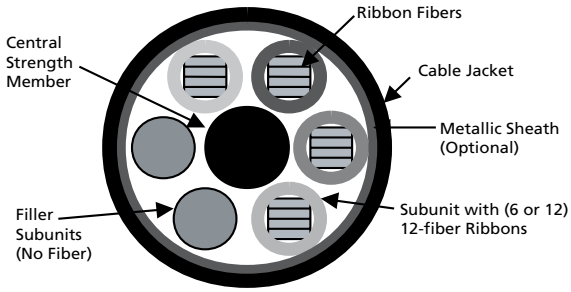

Figure 1
Ribbon buffer tube (RLBT) OSP cable

Breakout kits for RLBT cables contain multiple breakout bases, each with 5-meter lengths of protective tubing (see Figure 2). The protective tubing accommodates up to six ribbons. One breakout kit fits into each individual subunit. For mass fusion ribbon splicing applications in the FEC, ADC recommends splicing up to 72 fibers (six ribbons) in a dual splice tray. The tray should be equipped with an "MT" splice chip (see page 93 for information on mechanical or mass fusion ribbon trays). For single fusion splicing applications, ADC recommends 24 fibers per drawer using either two single trays or one dual tray. This kit is used to protect fiber ribbons between the cable clamp and the splice tray.

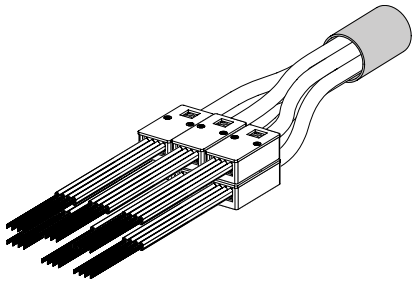

Figure 2
Breakout kit for RLBT OSP Cable

Breakout kits are designed for use in controlled environments only.

Catalog Number

BLK-RLBT-A _ _ _ _ **0**

Number of Protective Tubes Per Subunit[1]

01
02
03
04
05
06

Number of Subunits Containing Fiber

01
02
03
04
05
06

1-6 ribbons may be placed in each protective tube
Protective tubing length = 5 meters

[1] **The number of protective tubes per subunit is calculated as follows:**
Divide the number of fibers per subunit (typically 72 or 144) by the number of fibers (12, 24, 36, 48, 72) to be spliced in each splice tray.

Example: If each subunit has 144 fibers with 36 fibers per tray, then each subunit would require four protective tubes.

To order protective tubing cutting tool, see page 99. For installation instructions, refer to user manual ADCP-93-305.

Other configurations are available upon request. Please contact ADC Technical Assistance Center.

Breakout Kit for Ribbon Central Tube (RCT) OSP Cable

Ribbon central tube OSP cables are constructed as shown in Figure 1. The ribbons in RCT cables feature 12 or 24 fibers per ribbon. Cables with 288 or more fibers are typically built with ribbons featuring 24 fibers per ribbon. Each cable consists of a single central tube that encloses the ribbons.

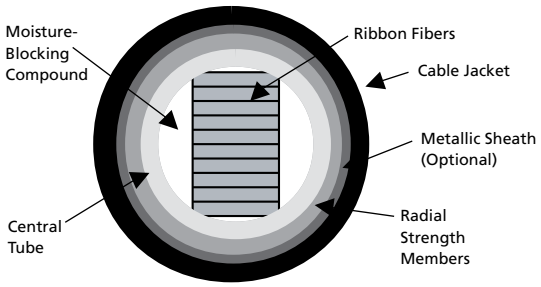

Figure 1
Ribbon central tube (RCT) OSP cable construction

Breakout kits for RCT cables contain a single breakout base attached to the central tube. Protective tubing is attached to the breakout base in 5-meter lengths (see Figure 2). Smaller protective tubing can accommodate up to six ribbons featuring 12 fibers per ribbon. Larger tubing is used for ribbons with 24 fibers per ribbon.

For mass fusion ribbon splicing in the FEC, ADC recommends splicing 72 fibers per drawer. For ribbon featuring 12 fibers per ribbon, six ribbons would be spliced in each drawer. For ribbon featuring 24 fibers per ribbon, three ribbons would be spliced in each drawer. An "MT" chip (see page 93 for information on mechanical or mass fusion ribbon trays) is required for mass fusion ribbon splicing in a dual splice tray.

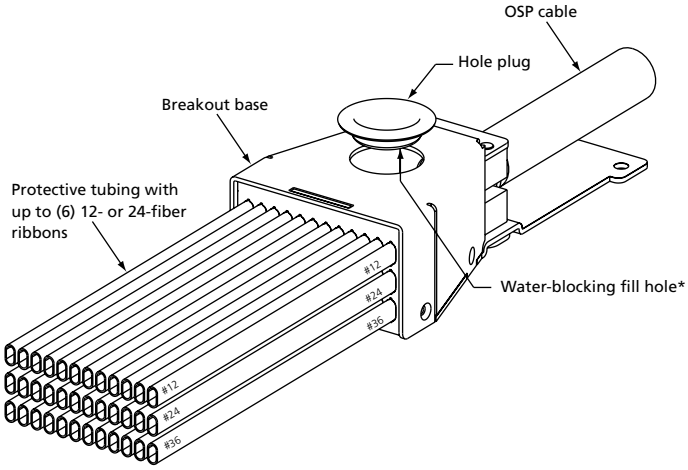

Figure 2
Breakout kit for RCT cable

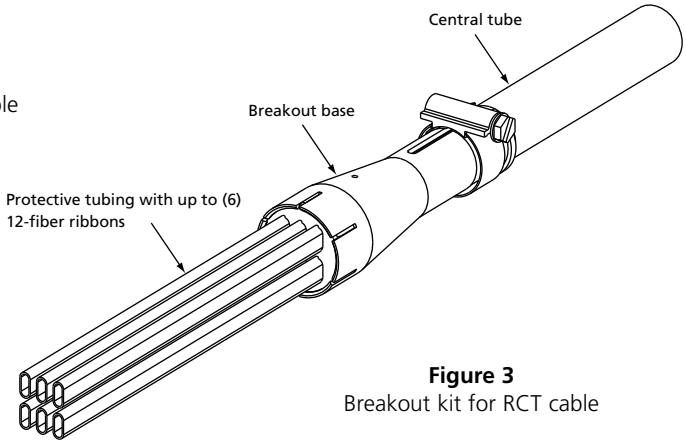

Figure 3
Breakout kit for RCT cable

*See page 100 to order the moisture blocking kit.

RCT Breakout Kit Typical Configurations

432- and 864-fiber ribbon in central tube (RCT) OSP cables featuring 24 fibers per ribbon are common. The table below shows the number of protective tubes per breakout base required for 432- and 864-fiber cables based on the number of fibers per tray. This kit is used to protect fiber ribbons between the cable clamp and splice tray.

Number of Fibers per Tray	Number of Ribbons per Protective Tube	432-Fiber Central Tube OSP Cable, 24-Fiber Ribbon	864-Fiber Central Tube OSP Cable, 24-Fiber Ribbon
24	1	18	36
48	2	9	18
72	3	6	12
96	4	N/A	9
144	6	3	6

Breakout kits with 36 protective tubes use a large breakout base, kits with 9–18 protective tubes use a medium breakout base and kits with 6 protective tubes use a small breakout base.

Catalog Number

BLK-RCT - ___ ___ ___ 0

Ribbon Type

A	< /= 12-fiber
B	24-fiber

Number of Protective Tubes per Breakout Base[1]

01
02
03
04
05
06
09
12
16
18
24
36

Refer to Figure 3 (p 95) for kit style

Refer to Figure 2 (p 95) for kit style

Central Tube Outside Diameter

		Fiber Count	Number of Fibers per Ribbon
B	5 mm – 8 mm (0.2" – 0.33")	12-96	12
C	8 mm – 11 mm (0.33" – 0.43")	108-216	12
D	11 mm – 15 mm (0.43" – 0.6")	240-432	24
E	15 mm – 20 mm (0.6" – 0.8")	576, 720, 864	24, 36

[1] 1-6 ribbons may be placed in each protective tube with either 12 or 24 fibers per ribbon
Protective tubing length = 5 meters

[1] **The number of protective tubes per central tube is calculated as follows:**
Divide the number of fibers per central tube (typically between 144 and 864) by the number of fibers (12, 24, 36, 48, 72) to be spliced in each splice tray.

Example: If the central tube has 864 fibers with 36 fibers per splice tray, then the breakout base would require 24 protective tubes.

To order protective tubing cutting tool, see page 99.
For installation instructions, refer to user manual ADCP-93-305. Page 12, figure 10.

Other configurations are available upon request. Please contact ADC Technical Assistance Center.

Breakout Kit for Intrafacility (IFC) Ribbon Cables

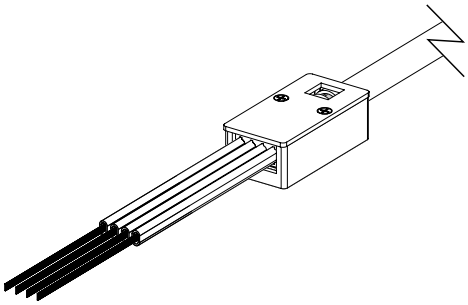

Breakout Kit for IFC Ribbon Cables

ADC's ribbon IFC cables have a central tube construction. The ribbons in IFC cables feature 12 fibers per ribbon. A central tube encloses the ribbons and features fiber counts ranging from 24 fibers to 216 fibers. Central tubes with 72, 96, 144 and 216 fibers are most common. IFC ribbon cables are used in off-frame splicing applications where mass fusion ribbon splicing is used.

Breakout kits for these cables can be configured from the information listed on pages 97-98. The breakout kits for IFC cables contain a single breakout base attached to the central tube. Protective tubing is attached to the breakout base in 5-meter lengths and can accommodate up to six ribbons featuring 12 fibers per ribbon.

For mass fusion ribbon splicing in the FEC, ADC recommends splicing 72 fibers per drawer. For ribbon featuring 12 fibers per ribbon, six ribbons would be spliced in each drawer. For ribbon featuring 24 fibers per ribbon, three ribbons would be spliced in each drawer. An "MT" chip (see page 93 for information on mechanical or mass fusion ribbon trays) is required for mass fusion ribbon splicing in a dual splice tray.

The breakout kits for 72, 96, 144, 216 and 432 fiber IFC cables are shown in the table below. This kit is used to protect fiber ribbons between the cable clamp and the splice tray.

Ordering Information

IFC Cable Fiber Count	Number of Fibers per Tray	Catalog Number
72	36	BLK-RIFC-A02B0
72	72	BLK-RIFC-A01B0
96	48	BLK-RIFC-A02B0
144	36	BLK-RIFC-A04C0
144	72	BLK-RIFC-A02C0
216	36	BLK-RIFC-A06C0
216	72	BLK-RIFC-A03C0
432	72	BLK-RIFC-A06E0

IFC Breakout Kit Typical Configurations

When splicing IFC ribbon cables in the FEC cabinet, ADC recommends 72 fibers per drawer. Fewer splices can be used, but the FEC easily accommodates 72 fibers per drawer in mass fusion ribbon splicing applications.

Catalog Number

BLK-RIFC-A ___ ___ ___ **0**

Number of Protective Tubes per Breakout Base[1, 2]

01
02
03
04
05
06

Central Tube Outside Diameter

B	5 mm – 8 mm (0.2" – 0.33")
C	8 mm – 11 mm (0.33" – 0.43")
D	11 mm – 15 mm (0.43" – 0.6")
E	15 mm – 20 mm (0.6" – 0.8")

[1] 1–6 ribbons may be placed in each protective tube ADC recommends 6 ribbon units (72 fibers) per tube. Protective tubing length = 5 meters

[2] **The number of protective tubes per central tube is calculated as follows:**
Divide the number of fibers per central tube (typically between 72 and 216) by the number of fibers (12, 24, 36, 48, 72) to be spliced in each splice tray.

Example: If the central tube has 144 fibers with 36 fibers per splice tray, then the breakout base would require four protective tubes.

To order protective tubing cutting tool, see page 99. For installation instructions, refer to user manual ADCP-93-305.

Other configurations are available upon request. Please contact ADC Technical Assistance Center.

Protective Tubing Cutting Tool

The protective tubing cutting tool is used to score the protective tubing so the tubing can be cut to the appropriate lengths for the final installation.

Ordering Information

Description	Catalog Number
Protective tubing cutting tool	BLK-BK0TUB

Grounding Kit

Kit used to ground armored fiber cable.

Ordering Information

Description	Catalog Number
Grounding kit for Armored OSP cable Includes: One cable assembly lug type ground kit One #6 ground cable 229 mm (9") long	GAK-FEC001
Any armored loose tube or buffer tubed fiber OSP cable Includes: One bullet ground connector One #6 ground cable 127 mm (5") long	GND-STPKIT
Frame mount configuration Any armored loose tube or buffer tubed OSP cable Includes: One bullet ground connector One #6 ground cable 305 mm (12") long	FEC-ACCGND02

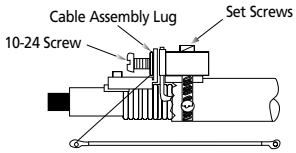

Grounding Kit (GAK-FEC001 Shown)

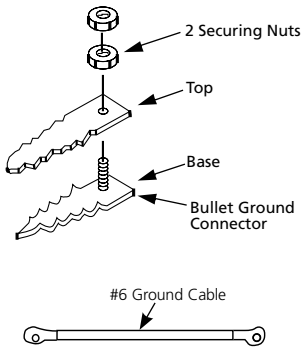

Grounding Kit (GND-STPKIT Shown)

Splice Protector Sleeve

The splice protector sleeve is constructed to protect a splice post fusion. It is made from heat shrinkable material and contains a built-in strength member for physical protection of the fusion splice. The splice protector sleeve is placed on the fiber before making a splice, moved over the splice when the splice fusion is complete and shrunk into place. They are available in either single fiber or mass fusion sleeves.

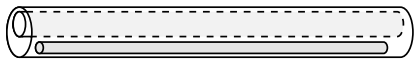

Splice Protector Sleeve
(FST-ACC001 Shown)

Ordering Information

Description	Catalog Number
Splice protector sleeve for	
Single fiber – single fusion; 60 mm (2.4") length, 1 each	FST-ACC001
Single fiber – single fusion; 40 mm (1.6") length, 1 each	FST-ACC005
12-fiber – mass fusion – heat shrink; 40 mm (1.6") length, 1 each	FST-ACC006

Grounding/Moisture Blocking Kits

Kit used to properly block gel filled stranded and ribbon cables.

Ordering Information

Description	Catalog Number
Grounding/Moisture blocking kit; Includes components for grounding and blocking gel filled fiber cables: blocking gel, heat shrink and grounding accessories	FBK-0SP002
Moisture blocking kit; Includes components for blocking gel filled fiber cables: syringe, blocking gel	BLK-MSTRKIT

Cable Assembly Solutions

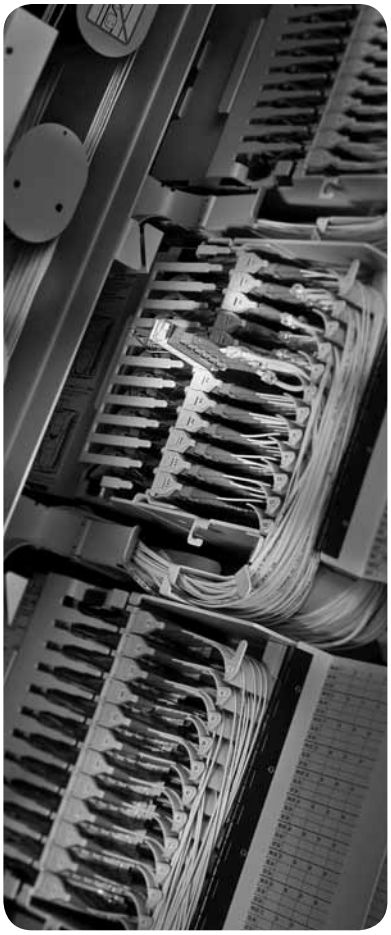

Introduction 102
Tracerlight® Patch Cords 104
Patch Cords 106
Attenuators 108

Fiber Cable Assemblies and Accessories

Introduction

Comprehensive Product Line

ADC produces a wide variety of fiber cable assemblies and accessories designed to meet the specific application needs of our customers. From patch cords, multifiber assemblies and connectors to adapters and attenuators, ADC is the choice for the essential products necessary to meet the requirements of today's high-speed networks.

Advanced Manufacturing Processes

Advanced manufacturing processes allow us to meet some of the strictest specifications in the industry at prices comparable to those of less stringently produced components. ADC's innovative polishing techniques, rigorous evaluation of epoxies, serialized tracking and the strictest testing processes make us an industry leader in fiber components.

Quality Assurance

ADC tests every singlemode connector and applies a bar code traceable to the exact insertion loss and return loss for that termination. This aids in the documentation of the exact losses in the network. The bar code system also stores information about the materials used and the manufacturing process applied to produce the patch cord. These records are retained for your reference for over three years.

ADC's polishing process ensures consistently low insertion and return loss values. Insertion and return loss values are affected by the endface geometries of the fiber connector. ADC's fiber assemblies meet Telcordia® GR-326 industry requirements for quality and performance.

ADC's patch cord manufacturing personnel are certified through ADC's rigorous internal fiber patch cord training processes.

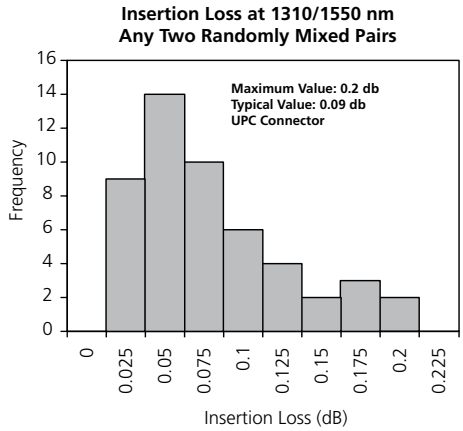

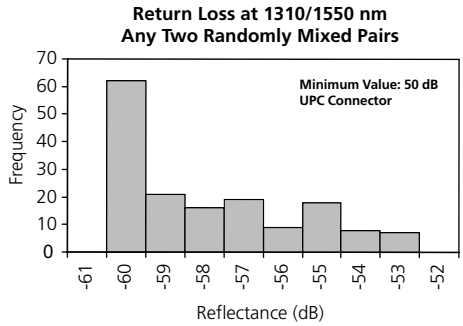

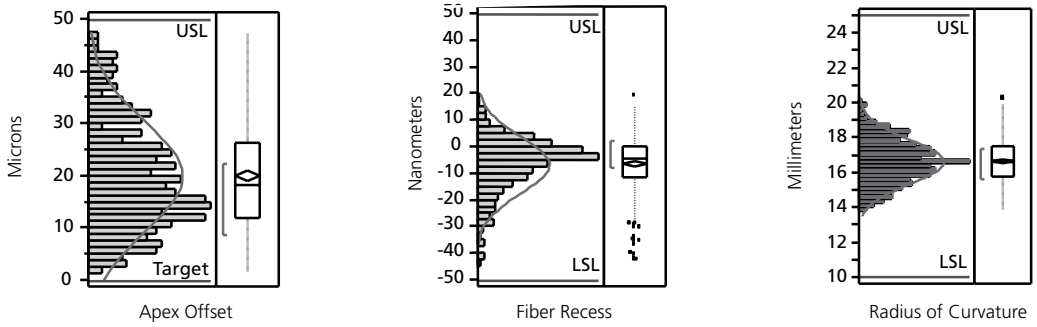

UPC Connector Measurements

Patch Cords

TracerLight® Connector Identification System

Power Source and Patch Cords

ADC's innovative TracerLight® connector identification system offers a quick and accurate method of identifying the termination point of optical patch cords. Each end of a TracerLight patch cord features a flashing light allowing technicians to visually trace individual patch cords from one end to the other without pulling or affecting the patch cord. The TracerLight power source is easily attached to the TracerLight component on one end of the patch cord. This causes the LED on each end to begin flashing rapidly. As a result, the distant end of the patch cord can be quickly and easily identified without interruption of service or disturbance of the optical signal path.

Available in any standard length or connector style, TracerLight patch cords have the same functions, optical performance and stringent environmental requirements as our standard patch cords. TracerLight patch cords are installed in the same manner as standard patch cords and can be pulled through ADC's FiberGuide® fiber cable management system with ease.

The compact power source is comprised of a lightweight, plastic flashlight body featuring two AA batteries and a printed circuit board (PCB). It provides approximately 80 hours of continuous service and features 1-hour auto-off. The end of battery life is indicated by a slowing of the blink rate.

TracerLight Connector Identification System

TracerLight Power Source
FTL-PS

Ordering Information

Description	Catalog Number
TracerLight Power Source	FTL-PS
TracerLight Plus Launch Cable (for use with a tone generator)	FTL-TGLC

Patch Cords

TracerLight® Singlemode or Multimode Patch Cords

Simplex

Catalog Number

FTL- __ / __ - _ _ _ _ M

Connector Style (first end)

Singlemode	
7	SC ultra polish
E	SC angled polish
2	FC ultra polish
C	LC ultra polish
M	LC angled polish
Multimode	
9	SC
P	LC

Connector Style (second end)

Singlemode	
7	SC ultra polish
E	SC angled polish
2	FC ultra polish
C	LC ultra polish
M	LC angled polish
Multimode	
9	SC
P	LC

Assembly Length

001-020	1-20 meters in 1 meter increments
025-065	25-65 meters in 5 meter increments
070-150	70-150 meters in 10 meter increments

Cable Type (1.7 mm)

Singlemode	
D	Standard singlemode (yellow)
P	Reduced bend radius singlemode (blue)*
Multimode	
A	50/125 µm multimode (orange)
J	50/125 µm laser optimized to 300 m multimode (aqua)
G	62.5/125 µm multimode (orange)

Ordering Examples

FTL-7/7-D003M: Singlemode simplex patch cord with SC connectors on both ends, 3 meters in length.

FTL-9/9-A005M: Multimode simplex patch cord with SC connectors on both ends using 50/125 µm fiber, 5 meters in length.

Duplex

Catalog Number

FTL- _ _ _ _ _ _ M

Connector Style (first end)

Singlemode	
7	SC ultra polish
E	SC angled polish
2	FC ultra polish
C	LC ultra polish
M	LC angled polish
Multimode	
9	SC
P	LC

Connector Style (second end)

Singlemode	
7	SC ultra polish
E	SC angled polish
2	FC ultra polish
C	LC ultra polish
M	LC angled polish
Multimode	
9	SC
P	LC

Assembly Length

001-020	1-20 meters in 1 meter increments
025-065	25-65 meters in 5 meter increments
070-150	70-150 meters in 10 meter increments

Cable Type (1.7 mm)

Singlemode	
Z	Dual zip singlemode (yellow)
R	Reduced bend radius dual zip singlemode (blue)*
Multimode	
E	50/125 µm dual zip multimode (orange)
K	50/125 µm laser optimized to 300 m multimode (aqua)
H	62.5/125 µm dual zip multimode (orange)

Ordering Examples

FTL-7CZ010M: Singlemode dual zip patch cord with SC to LC connectors, 10 meters in length.

FTL-PPE010M: Multimode dual zip patch cord with LC connectors on both ends using 50/125 µm fiber, 10 meters in length.

*Not a substitute for well-engineered cable management.

Other configurations are available upon request. Please contact ADC Technical Assistance Center.

4/11 • 1037742AE

Patch Cords

Singlemode Patch Cords (Simplex and Duplex)

All patch cords undergo stringent testing for both insertion loss and return loss at the factory before shipment to ensure that only quality product is delivered to the customer.

ADC offers ultra physical contact (UPC) polish on the SC, FC, and LC connector styles.

Angled polish is available on the LC connector and the SC connector styles. Angled polish should be used in applications that require better control of return loss. ADC has tight tolerances regarding the rotation of the ferrule to maintain low insertion loss values.

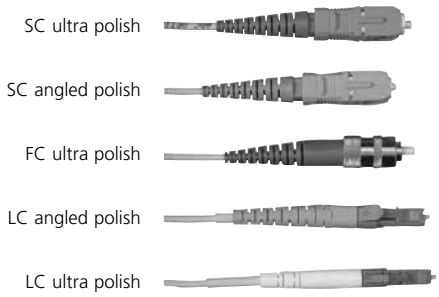

Connector Types

Catalog Number

__ __ - __ - __ - __ M

Cable Option

FPC	Connector on both ends (patch cord)
FPT	Connector on one end (pigtail)

Cable Type

Standard singlemode	
M	2.0 mm single
F	1.7 mm single
9	900 µm
2	2.0 mm dual zip
T	1.7 mm dual zip
Reduced bend radius	
MW	2.0 mm single
FW	1.7 mm single
9W	900 µm
2W	2.0 mm dual zip
TW	1.7 mm dual zip

Assembly Length

1-20	1-20 meters in 1 meter increments
25-65	25-65 meters in 5 meter increments
70-150	70-150 meters in 10 meter increments

Fiber Type

S	Standard singlemode
P	Reduced bend radius singlemode (blue)*
LEAVE BLANK	2.0 mm standard singlemode

Singlemode Connector Type[1]

SPSC	SC ultra polish simplex
APSC	SC angled polish simplex
SDSC	SC ultra polish duplex[2]
SPFC	FC ultra polish simplex
SPLC	LC ultra polish simplex
SDLC	LC ultra polish duplex[2]
APLC	LC angled polish simplex

Ordering Examples

FPC2-SPSC-10M: Singlemode 2.0 mm dual zip patch cord with SC ultra polish connectors on both ends, 10 meters in length with standard breakout length of 0.31 m (12") on both ends.

[1] For hybrid patch cords, enter both connector types in this field and separate them with a slash mark; remove 's' from the ultra polish option.

FPCF-SPSC/PLC-S-10M: Singlemode 1.7 mm simplex patch cord with SC ultra polish connector on one end and LC ultra polish connector on the other end, 10 meters in length.

[2] One connector per end; requires dual zip cable

*** Not a substitute for well-engineered cable management.**

Other connector styles are available upon request. Please contact ADC Technical Assistance Center.

Patch Cords

Multimode Patch Cords (Simplex and Duplex)

Multimode patch cords are available with the LC small-form-factor connector and the SC connector.

These patch cords are assembled using the same advanced manufacturing processes as the singlemode, ensuring the highest quality standards.

LC-SC Multimode Patch Cord

Catalog Number

__ __ - __ - __ - __ M

Cable Option

FPC	Connector on both ends (patch cord)
FPT	Connector on one end (pigtail)

Cable Type

M	2.0 mm single
F	1.7 mm single
9	900 µm
2	2.0 mm dual zip
T	1.7 mm dual zip

Assembly Length

1-20	1-20 meters in 1 meter increments
25-65	25-65 meters in 5 meter increments
70-150	70-150 meters in 10 meter increments

Fiber Type

A	50/125 µm multimode
B	62.5/125 µm multimode
F	50/125 µm laser optimized to 300 m multimode (aqua)

Multimode Connector Type[1]

MSC	SC simplex
MDSC	SC duplex[2]
MLC	LC simplex
MDLC	LC duplex[2]

Ordering Examples

FPCM-MSC-B-7M: Multimode simplex 2.0 mm patch cord with SC connectors on both ends, 62.5/125 µm fiber type, 7 meters in length.

[1] **For hybrid patch cords,** enter both connector types in this field and separate them with a slash mark.

FPCM-MSC/MLC-A-3M: Multimode simplex 2.0 mm patch cord with SC connector on one end and LC connector on the other end, 50/125 µm fiber type, 3 meters in length.

[2] One connector per end; requires dual zip cable.

Other configurations are available upon request. Please contact ADC Technical Assistance Center.

4/11 • 1037742AE

Attenuators

In-Line Attenuators

A fiber optic attenuator is an optical device that induces a calibrated fixed loss between two connectors, which dampens, or attenuates the fiber optic signal. Attenuation is required if an optical signal has too much power, exceeding the operating range of the equipment, which causes saturation at the receiver and induces system errors or failures.

ADC's full line of attenuators is manufactured to meet the demands of your network. In-line attenuators are installed between an adapter and a connector; they are fused attenuators, providing exceptional optical performance.

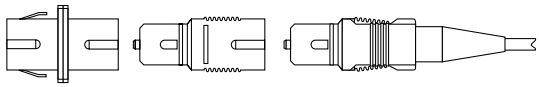

Adapter **In-Line Attenuator** **Connector/ Patch Cord**

Attenuation	Tolerance
≤5 dB	±0.75 dB
>5 dB	±10%

In-Line FC Attenuator

In-Line SC Attenuator

Ordering Information

Description	Catalog Number*
LC ultra polish	
05 dB	FOA-INLC05
10 dB	FOA-INLC010
15 dB	FOA-INLC015
20 dB	FOA-INLC020
SC ultra polish	
05 dB	FOA-INSC05
10 dB	FOA-INSC10
15 dB	FOA-INSC15
20 dB	FOA-INSC20
SC angled polish	
05 dB	FOA-INASC05
10 dB	FOA-INASC10
15 dB	FOA-INASC15
20 dB	FOA-INASC20
FC ultra polish	
05 dB	FOA-INFC05
10 dB	FOA-INFC10
15 dB	FOA-INFC15
20 dB	FOA-INFC20

* Other attenuation values and connector styles are available upon request. Please contact ADC Technical Assistance Center.

Index

Catalog Numbers

7RFP-5NPW 63
9RFP-5NPW 63
115RFP-5NPW 63

A

ACB-PWNB 64, 84
ACE-ACC200-PKLT3 73
ACOK-2 27
ACOK-5 45
ACOK-PWNB 64, 84
AC-PWNB-RS5 ..... 64, 84

B

BLK-BK0TUB 99
BLK-MSTRKIT 100
BLK-RIFC-A01B0 97
BLK-RIFC-A02B0 97
BLK-RIFC-A02C0 97
BLK-RIFC-A03C0 97
BLK-RIFC-A04C0 97
BLK-RIFC-A06C0 97
BLK-RIFC-A06E0 97

E

E-501-11115 ..... 71, 72
E-501-12002 72
E-501-L18 56
E-501-L37 ..... 27, 45, 65
E-501-L39 ..... 64, 66
E-501-L40 ..... 56, 66
E-501-L41 66
E-501-L73 63
E-501-L91 53
E-501-L92 53
E-501-L93 53
E-501-L136 63
E-501-L139 58
E-501-L139-A 74, 83
E-501-L139-HD 71, 72, 73
E-501-L142 58
E-501-L143 58
E-501-L166 ..... 27, 45, 65
E-501-L409 58
E-501-L514 63
E-501-LGX 74

F

FBK-0SP002 100
FCM-6L0000 55
FCM-7L0000 55
FCM-620000 55
FCM-670000 55
FCM-720000 55
FCM-770000 55
FCM-TK0000 55
FCM-TM0000 55
FCM-Z70000 55
FCM-ZL0000 55
FDF-ACC139 60
FDF-ACC145 66
FDF-ACC146 ..... 28, 46, 62, 82
FDF-ACC152 60
FDF-ACC-LDCT 63
FDF-ACC-LHCT 63
FDF-FCMVAM 57
FDF-FCMWVAM 57
FDF-ISOTEMPLATE 62, 82
FDF-RFSP 59
FEC-ACCCLMP01 88
FEC-ACCGND02 99
FEC-ACCLMP01 93
FMT-DPK000000-A00P 73
FMT-DRT0J0A00-A32P 73
FOA-INASC05 108
FOA-INASC10 108
FOA-INASC15 108
FOA-INASC20 108
FOA-INFC05 108
FOA-INFC10 108
FOA-INFC15 108
FOA-INFC20 108
FOA-INLC05 108
FOA-INLC010 108
FOA-INLC015 108
FOA-INLC020 108
FOA-INSC05 108
FOA-INSC10 108
FOA-INSC15 108
FOA-INSC20 108
FPS-MPP1AJJ 73
FPS-MPPRACKMT24 73
FST-ACC001 ..... 20, 67, 93, 100
FST-ACC005 ..... 20, 67, 100
FST-ACC006 ..... 20, 67, 93, 100
FST-D-FT 67, 93
FST-D-HS 67, 93
FST-D-MT 67, 93
FST-F3DF-FT 85
FST-F3DF-HS 85
FST-F3DF-MT 85
FST-F3DF-MT-D 85
FST-F3DF-NT 85
FST-FT 67, 93
FST-HS 67, 93
FST-MT 67, 93
FTL-PS 104
FTL-TGLC 104
FVM-LGX19X350-W 80
FVM-VLM19X700-W 80
FVM-VLM-19X900-W 80

G

GAK 65
GAK-FEC001 99
GND-STPKIT 99

I

IPA-K1 46

L

LSX-1L0000 76
LSX-1L0000-12 76
LSX-1L1012-A-SPL 77
LSX-1L1022-A-SPL 77
LSX-1L5013-A-SPL 77
LSX-1L5023-A-SPL 77
LSX-1T0000 76
LSX-1T0000-12 76
LSX-1T1012-A-SPL 77
LSX-1T1022-A-SPL 77
LSX-2L0000 76
LSX-3L1032-A-SPL 77
LSX-3L5033-A-SPL 77
LSX-3T1042-A-SPL 77
LSX-6L0000 76
LSX-6L1062-A-SPL 77
LSX-6L5063-A-SPL 77
LSX-6T0000 76
LSX-6T1062-A-SPL 77
LSX-7L0000 76
LSX-7L1092-A-SPL 77
LSX-7L5093-A-SPL 77
LSX-7T0000 76
LSX-7T1092-A-SPL 77
LSX-120000 76
LSX-120000-12 76
LSX-121012-A-SPL 77
LSX-121022-A-SPL 77
LSX-125013-A-SPL 77
LSX-125023-A-SPL 77
LSX-170000 76
LSX-170000-12 76
LSX-171012-A-SPL 77
LSX-171022-A-SPL 77
LSX-175013-A-SPL 77
LSX-175023-A-SPL 77

Index

LSX-220000 76
LSX-270000 76
LSX-321032-A-SPL 77
LSX-325033-A-SPL 77
LSX-371032-A-SPL 77
LSX-375033-A-SPL 77
LSX-620000 76
LSX-621062-A-SPL 77
LSX-625063-A-SPL 77
LSX-670000 76
LSX-671062-A-SPL 77
LSX-675063-A-SPL 77
LSX-720000 76
LSX-721092-A-SPL 77
LSX-725093-A-SPL 77
LSX-770000 76
LSX-771092-A-SPL 77
LSX-775093-A-SPL 77
LSX-ACCVCGKIT 85
LSX-CBLCLMPKIT 85
LSX-L20000 76
LSX-L70000 76
LSX-LC0000 76
LSX-LC1242-A-SPL 78
LSX-LK0000 76
LSX-LL0000 76
LSX-LM0000 76
LSX-LT0000 76
LSX-LT1242-A-SPL 78
LSX-SPLCA06 79
LSX-T20000 76
LSX-T21122-A-SPL 78
LSX-T25123-A-SPL 78
LSX-T70000 76
LSX-T71122-A-SPL 78
LSX-T75123-A-SPL 78
LSX-TC0000 76
LSX-TC1122-A-SPL 78
LSX-TK0000 76
LSX-TK1122-A-SPL 78
LSX-TK25123-A-SPL 78
LSX-TL0000 76
LSX-TL1122-A-SPL 78
LSX-TL5123-A-SPL 78
LSX-TM0000 76
LSX-TM1122-A-SPL 78
LSX-TM25123-A-SPL 78
LSX-TT0000 76
LSX-TT1122-A-SPL 78

M

MFCM-690000 55
MFCM-790000 55
MFCM-TP0000 55
MFCM-Z90000 55
MX6-BAYTEMPLATE 88
MX6-SPL6030-A-D7Z4 88
MX6-SPL6030-A-U7Z4 88
MX6-SPLIFCCLMP 88

N

NG3-ACC3TRCLMP 40
NG3-ACCEXTMFTWN-12 45
NG3-ACCEXTMFTWN-24 45
NG3-ACCEXTMFTWN-54 45
NG3-ACCIFCKIT 40
NG3-ACCISOPEGD 46
NG3-ACCISOPFOTSP12 46
NG3-ACCISOPMFTWN 46
NG3-ACCWORKSHELF01 44
NG3-EBTWN7ASC 37
NG3-EGDTWN7A00 44
NG3-FOTSP3TWN7A12 42
NG3-MFTWN7A00 36
NG3-NGFTRNTWN7A0L ... 25, 43
NG3-NGFTRNTWN7A0R ... 25, 43
NG3-VPB0000 41
NGF-ACCCLMP04 29
NGF-ACCCLMP08 ..... 29, 40
NGF-ACCEGD007 26
NGF-ACCEXT12-30 27
NGF-ACCEXT24-30 27
NGF-ACCEXT24-SR 27
NGF-ACCEXT54-30 27
NGF-ACCEXT54-SR 27
NGF-ACCEXTSLM12 27
NGF-ACCFOTSB 24
NGF-ACCFOTSB-SL 24
NGF-ACCFOTSB-SR 24
NGF-ACCISOP8X19 28
NGF-ACCISOP8X24 28
NGF-ACCISOP19X19 28
NGF-ACCISOP30X19 28
NGF-ACCISOP30X24 28
NGF-ACCISOPEG19 28
NGF-ACCISOPEG24 28
NGF-ACCISOPFS12X19 28
NGF-ACCISOPFS12X24 28
NGF-ACCOSPKIT01 17
NGF-ACCOSPKIT02 17
NGF-ACCRCMSLD 17
NGF-ACCRCMSLU 17
NGF-ACCRCMSRD 17
NGF-ACCRCMSRU 17
NGF-ACCSHELF1-30 26
NGF-F3ACCEGD007 26
NGF-F3ACCFOTSB 24
NGF-F3ACCFOTSB-SL 24
NGF-F3ACCFOTSB-SR 24
NGF-F3MDF7A100-30 11
NGF-MDF7A100-30 10
NGF-SLM7A100 12
NGF-VSPM-7000L 21
NGF-VSPM-7000R 21

O

OSP-CLPFEC 93
OSP-CLPFEC-LG 93
OSP-CLPSST 93
OSP-CLPSST-IFCL 93
OSP-CLPSST-IFCS 93

R

RAC-0X0229 84
RAC-0X0230 84
RAC-0X0337 84
RAC-0X0338 84
RAC-0X0439 72
RAC-0X0440 72
RAC-0X0493 ..... 27, 45
RAC-7A0160 ..... 71, 72
RAC-7A0501 73
RAC-7B0162 ..... 71, 72, 73
RAC-MX0615 89
RAC-MX0616 89
RAC-OX0229 64
RAC-OX0230 64
RAC-OX0337 64
RAC-OX0338 64
RINST-DSX7-PW 62
RINST-DSX7-XX 82
RINST-DSX9-PW 62
RINST-DSX9-XX 82
RINST-DSXRFL-PW 62, 82
RINST-FLR 46, 62, 82
RINST-TOP7 ..... 28, 46
RWS19-FDF 44

U

UEGP-7PW 59, 74, 83
UEGP-9PW 59
UEGP-115PW 59

OPTICAL DISTRIBUTION FRAMES

Tyco Electronics Corporation
P.O. Box 1101
Minneapolis, Minnesota
USA 55440-1101
Tel: 1-800-366-3891
Tel: 1-952-938-8080
Fax: 1-952-917-3237

www.te.com/adc
www.tycoelectronics.com
www.us.telecomosp.com

Tyco Electronics Corporation. All rights reserved.
103742AE 4/11 Revision © 2011, 2010, 2007

TE (logo), Tyco Electronics and ADC are trademarks of the Tyco Electronics group of companies and its licensors.

While Tyco Electronics has made every reasonable effort to ensure the accuracy of the information in this document, Tyco Electronics does not guarantee that it is error-free, nor does Tyco Electronics make any other representation, warranty or guarantee that the information is accurate, correct, reliable or current. Tyco Electronics reserves the right to make any adjustments to the information contained herein at any time without notice. Tyco Electronics expressly disclaims all implied warranties regarding the information contained herein, including, but not limited to, any implied warranties of merchantability or fitness for a particular purpose. The dimensions in this document are for reference purposes only and are subject to change without notice. Specifications are subject to change without notice. Consult Tyco Electronics for the latest dimensions and design specifications.