THIS DRAWING IS UNPUBLISHED. RELEASED FOR PUBLICATION - , - .
© COPYRIGHT - By - ALL RIGHTS RESERVED.

LOC	DIST
AD	00

REVISIONS

P	LTR	DESCRIPTION	DATE	DWN	APVD
	A	REVISED PER ECO-14-016014	29OCT2014	NK	MM

△1 POINT OF MEASUREMENT FOR PLATING THICKNESS.

△2 THE NOTED DIMENSION APPLIES AT THE INTERSECTION OF THE POST AND HOUSING

△3 POSTS: .000003 GOLD OVER .000027 Pd/Ni IN CONTACT AREA, .000100-.000200 MATTE TIN-LEAD ON SOLDER TAIL, ALL OVER .000050 NICKEL

△4 POSTS: .000003 GOLD OVER .000027 Pd/Ni IN CONTACT AREA, .000100-.000200 MATTE TIN ON SOLDER TAIL, ALL OVER .000050 NICKEL

△5 PRELIMINARY-NOT RELEASED FOR PRODUCTION

△6 MATERIAL: HOUSING-FLAME RETARDANT THERMOPLASTIC, COLOR-BLACK, POSTS-COPPER ALLOY

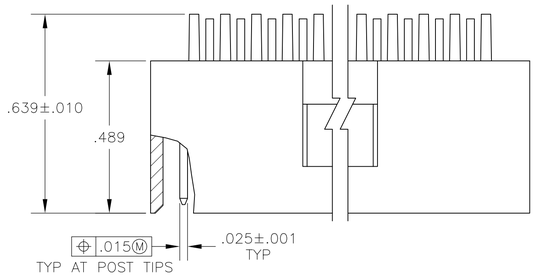

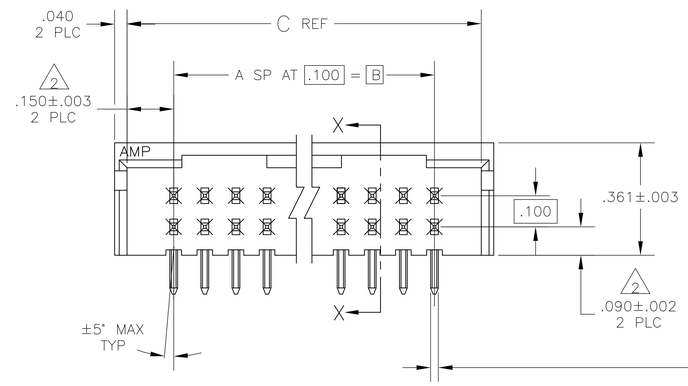

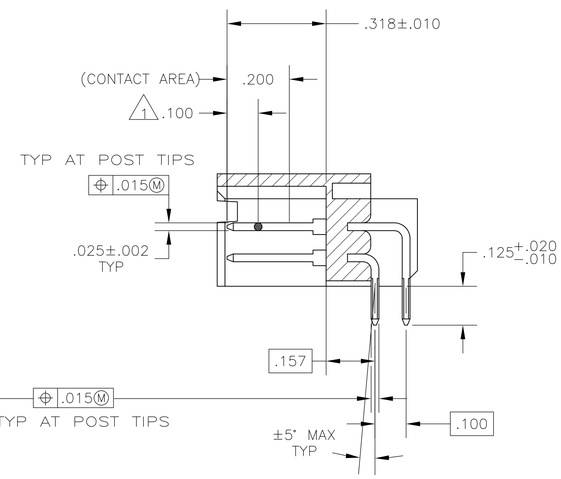

SECTION X-X

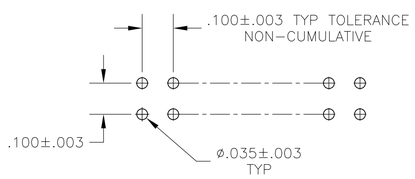

RECOMMENDED HOLE LAYOUT

	△4	3.200	2.900	29	60	7-2267098-6
	△4	3.100	2.800	28	58	7-2267098-5
	△4	3.000	2.700	27	56	7-2267098-4
	△4	2.900	2.600	26	54	7-2267098-3
△5	△4	2.800	2.500	25	52	7-2267098-2
	△4	2.700	2.400	24	50	7-2267098-1
	△4	2.600	2.300	23	48	7-2267098-0
	△4	2.500	2.200	22	46	6-2267098-9
	△4	2.400	2.100	21	44	6-2267098-8
	△4	2.300	2.000	20	42	6-2267098-7
	△4	2.200	1.900	19	40	6-2267098-6
	△4	2.100	1.800	18	38	6-2267098-5
	△4	2.000	1.700	17	36	6-2267098-4
△5	△4	1.900	1.600	16	34	6-2267098-3
	△4	1.800	1.500	15	32	6-2267098-2
	△4	1.700	1.400	14	30	6-2267098-1
	△4	1.600	1.300	13	28	6-2267098-0
	△4	1.500	1.200	12	26	5-2267098-9
	△4	1.400	1.100	11	24	5-2267098-8
△5	△4	1.300	1.000	10	22	5-2267098-7
	△4	1.200	.900	9	20	5-2267098-6
△5	△4	1.100	.800	8	18	5-2267098-5
	△4	1.000	.700	7	16	5-2267098-4
	△4	.900	.600	6	14	5-2267098-3
	△4	.800	.500	5	12	5-2267098-2
	△4	.700	.400	4	10	5-2267098-1
	△3	3.200	2.900	29	60	2-2267098-6
△5	△3	3.100	2.800	28	58	2-2267098-5
	△3	3.000	2.700	27	56	2-2267098-4
	△3	2.900	2.600	26	54	2-2267098-3
	△3	2.800	2.500	25	52	2-2267098-2
	△3	2.700	2.400	24	50	2-2267098-1
	△3	2.600	2.300	23	48	2-2267098-0
△5	△3	2.500	2.200	22	46	1-2267098-9
	△3	2.400	2.100	21	44	1-2267098-8
	△3	2.300	2.000	20	42	1-2267098-7
	△3	2.200	1.900	19	40	1-2267098-6
	△3	2.100	1.800	18	38	1-2267098-5
△5	△3	2.000	1.700	17	36	1-2267098-4
	△3	1.900	1.600	16	34	1-2267098-3
	△3	1.800	1.500	15	32	1-2267098-2
	△3	1.700	1.400	14	30	1-2267098-1
△5	△3	1.600	1.300	13	28	1-2267098-0
	△3	1.500	1.200	12	26	2267098-9
	△3	1.400	1.100	11	24	2267098-8
△5	△3	1.300	1.000	10	22	2267098-7
	△3	1.200	.900	9	20	2267098-6
△5	△3	1.100	.800	8	18	2267098-5
	△3	1.000	.700	7	16	2267098-4
	△3	.900	.600	6	14	2267098-3
△5	△3	.800	.500	5	12	2267098-2
	△3	.700	.400	4	10	2267098-1
PLATING	C	B	A	NO OF POSN	PART NUMBER	

THIS DRAWING IS A CONTROLLED DOCUMENT.

DIMENSIONS: INCHES

TOLERANCES UNLESS OTHERWISE SPECIFIED:
0 PLC ± –
1 PLC ± –
2 PLC ± –
3 PLC ± .005
4 PLC ± –
ANGLES ± –

MATERIAL △6

FINISH SEE TABLE

DWN 02JUN2014 NAGALAKSHMI K
CHK 02JUN2014 MILLER, MICHAEL
APVD 02JUN2014 MILLER, MICHAEL

PRODUCT SPEC —
APPLICATION SPEC —
WEIGHT —

TE Connectivity

NAME HEADER ASSY, MOD II, DBL ROW, .100X.100 C/L, RIGHT ANGLE, (3) SIDED SHROUD

SIZE A1 | CAGE CODE 00779 | DRAWING NO C-2267098 | RESTRICTED TO —

CUSTOMER DRAWING | SCALE 4:1 | SHEET 1 OF 1 | REV A