THIS DRAWING IS UNPUBLISHED. RELEASED FOR PUBLICATION -,- .
© COPYRIGHT 2011 BY TE CONNECTIVITY. ALL RIGHTS RESERVED.

LOC	DIST
DW	—

REVISIONS

P	LTR	DESCRIPTION	DATE	DWN	APVD
	E	ECR-11-020266	11APR12	AW	WK

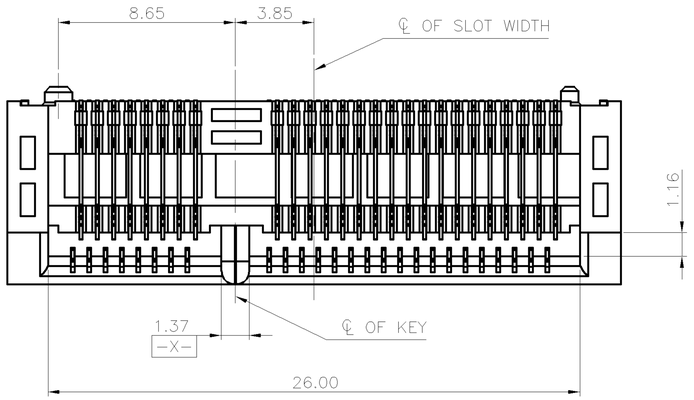

NOTES:

1. MATERIAL:
   HOUSING: LCP WITH 30% GF, UL94 V-0, BLACK COLOR.
   CONTACTS: PHOSPHOR BRONZE.
   PEGS: BRASS.

2. FINISH:
   CONTACTS: (SEE TABLE) GOLD PLATED ON CONTACT AREA, GOLD FLASH ON SOLDER AREA, WITH ENTIRE CONTACT UNDERPLATED 1.27μm [50μ"] MIN. NICKEL.
   PEGS: 3.048μm [120μ"] MIN. MATTE-TIN OVER 1.27μm [50μ"] MIN. NICKEL.

3. REFLOW SOLDER CAPABLE TO 260° PER TEC-109-201, CONDITION B.

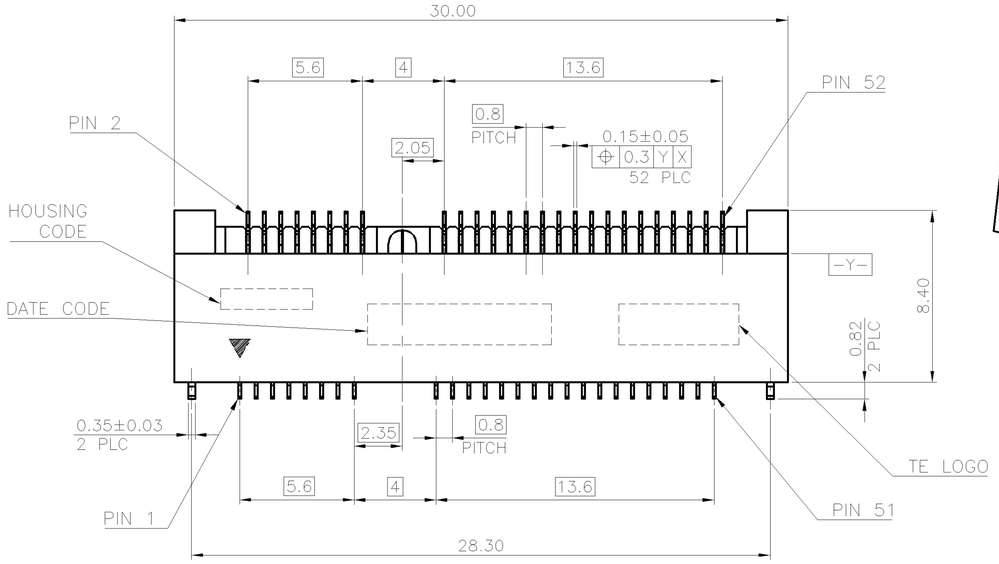

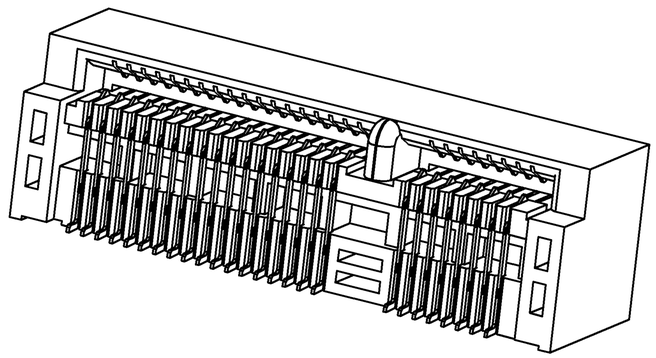

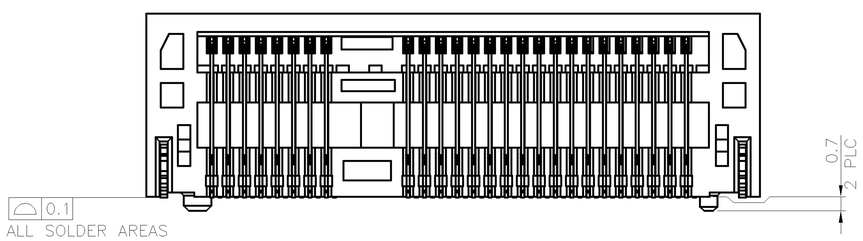

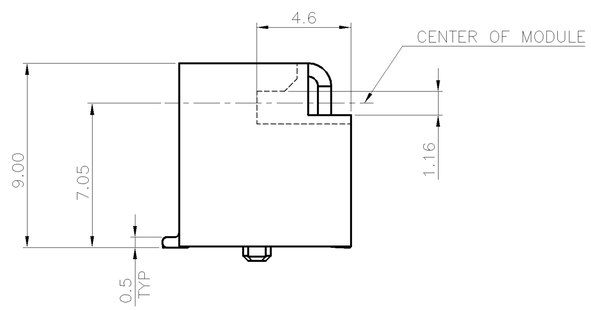

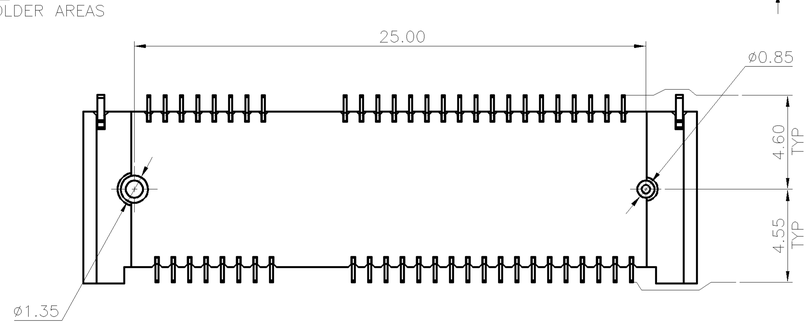

PCI-E MINI CARD CONNECTOR SIGNAL ASSIGNMENTS

PIN#	NAME	PIN#	NAME
51	Reserved	52	+3.3Vaux
49	Reserved	50	GND
47	Reserved	48	+1.5V
45	Reserved	46	LED_WPAN#
43	GND	44	LED_WLAN#
41	+3.3Vaux	42	LED_WWAN#
39	+3.3Vaux	40	GND
37	GND	38	USB_D+
35	GND	36	USB_D-
33	PETp0	34	GND
31	PETn0	32	SMB_DATA
29	GND	30	SMB_CLK
27	GND	28	+1.5V
25	PERp0	26	GND
23	PERn0	24	+3.3Vaux
21	GND	22	PERST#
19	Reserved* (UIM_C4)	20	W_DISABLE#
17	Reserved* (UIM_C8)	18	GND
MECHANICAL KEY			
15	GND	16	UIM_VPP
13	REFCLK+	14	UIM_RESET
11	REFCLK-	12	UIM_CLK
9	GND	10	UIM_DATA
7	CLKREQ#	8	UIM_PWR
5	COEX2	6	1.5V
3	COEX1	4	GND
1	WAKE#	2	3.3Vaux

* Reserved for future UIM interface (if needed)

mSATA CONNECTOR SIGNAL ASSIGNMENTS

PIN#	NAME	PIN#	NAME
51	Presence Detection	52	+3.3V
49	DA/DSS	50	GND
47	Vendor	48	+1.5V
45	Vendor	46	Reserved
43	No Connect	44	Reserved
41	+3.3V	42	Reserved
39	+3.3V	40	GND
37	GND	38	Reserved
35	GND	36	Reserved
33	+A	34	GND
31	-A	32	Two Wire Interface
29	GND	30	Two Wire Interface
27	GND	28	+1.5V
25	-B	26	GND
23	+B	24	+3.3V
21	GND	22	Reserved
19	Reserved	20	Reserved
17	Reserved	18	GND
MECHANICAL KEY			
15	GND	16	Reserved
13	Reserved	14	Reserved
11	Reserved	12	Reserved
9	GND	10	Reserved
7	Reserved	8	Reserved
5	Reserved	6	+1.5V
3	Reserved	4	GND
1	Reserved	2	+3.3V

C-1759513

GOLD FLASH	1759513-1
MIN. GOLD THICKNESS	PART NUMBER

THIS DRAWING IS A CONTROLLED DOCUMENT.

DIMENSIONS: MM

TOLERANCES UNLESS OTHERWISE SPECIFIED:
0 PLC ± -
1 PLC ±0.3
2 PLC ±0.2
3 PLC ± -
4 PLC ± -
ANGLES ± 3°

MATERIAL: SEE NOTE
FINISH: SEE NOTE

DWN A. WU 27JAN2011
CHK S. CHIEN 27JAN2011
APVD W. KODAMA 27JAN2011
PRODUCT SPEC 108-99102
APPLICATION SPEC —
WEIGHT 2.88 g

TE Connectivity

NAME
2 IN 1 mSATA & PCI EXPRESS MINI CARD CONNECTOR, 9 MM HEIGHT

SIZE	CAGE CODE	DRAWING NO	RESTRICTED TO
A2	00779	C-1759513	—

CUSTOMER DRAWING | SCALE — | SHEET 1 OF 5 | REV E

THIS DRAWING IS UNPUBLISHED. RELEASED FOR PUBLICATION -,- .
© COPYRIGHT 2011 BY TE CONNECTIVITY. ALL RIGHTS RESERVED.

LOC	DIST
DW	—

REVISIONS

P	LTR	DESCRIPTION	DATE	DWN	APVD
		SEE SHEET 1			

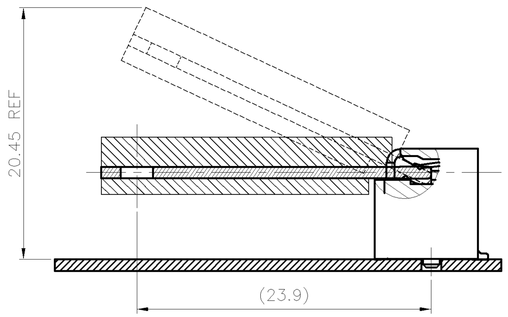

EJECT HEIGHT
FOR HALF CARD

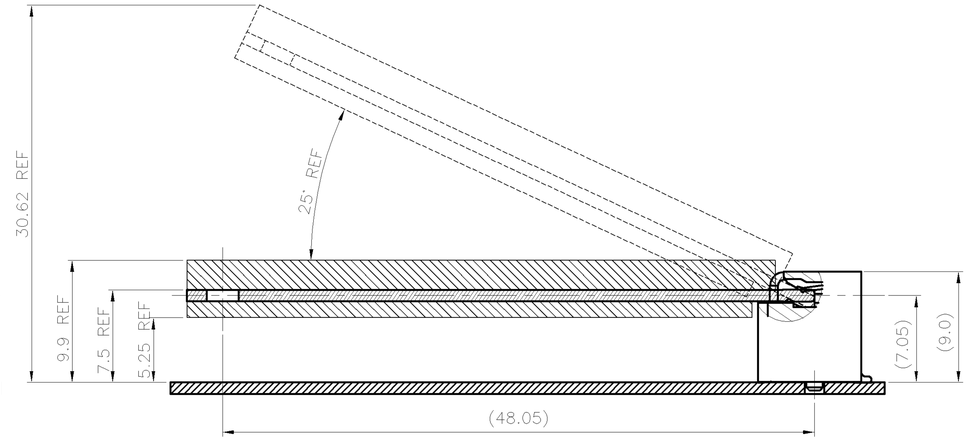

EJECT HEIGHT
FOR FULL CARD

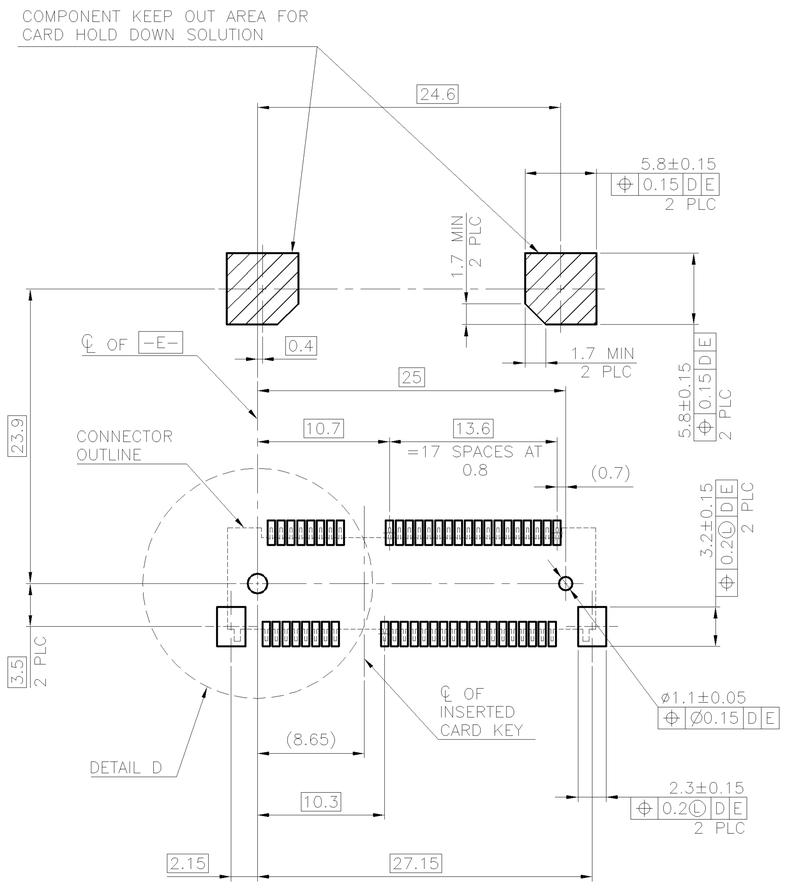

-D- IS THE TOP SURFACE OF PCB.

RECOMMENDED P.C. BOARD PATTERN LAYOUT
FOR HALF CARD CONNECTOR
(TOP VIEW)

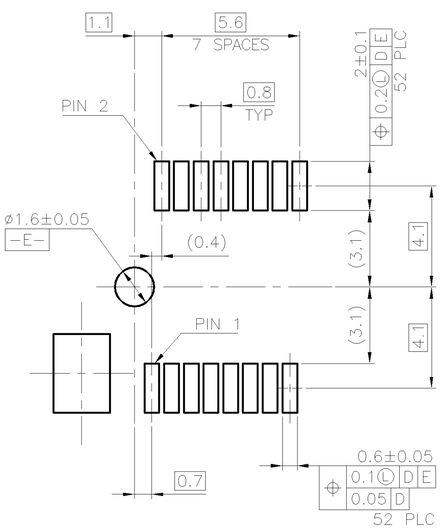

DETAIL D
SCALE 2:1

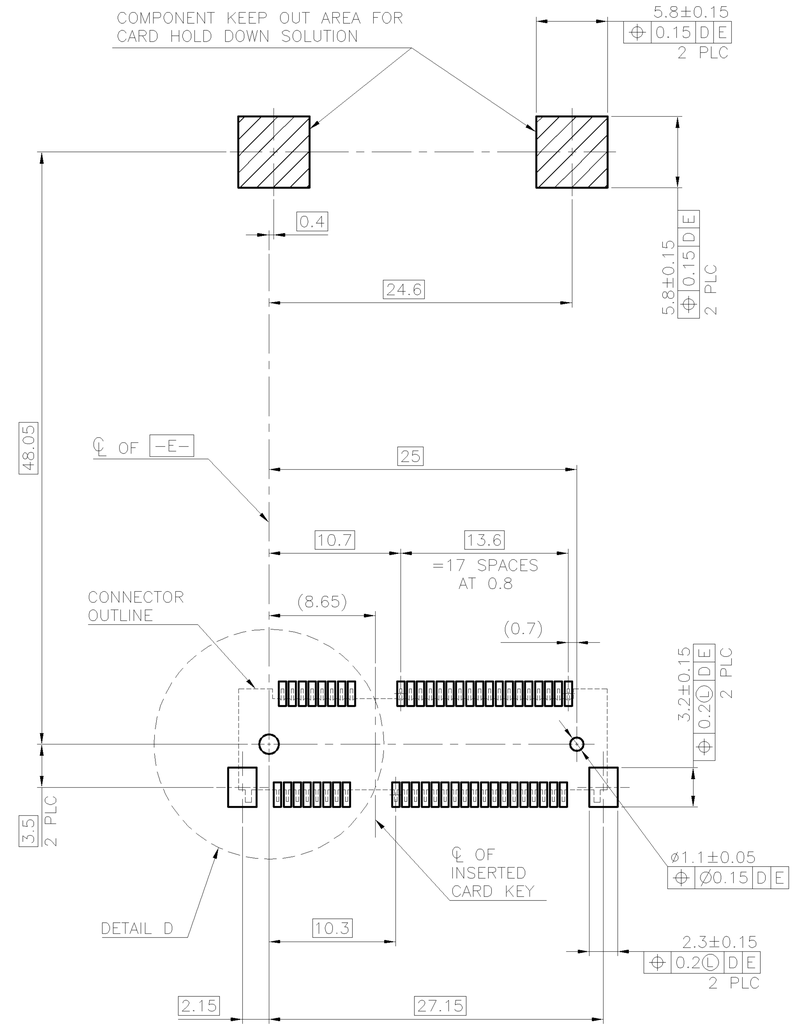

-D- IS THE TOP SURFACE OF PCB.

RECOMMENDED P.C. BOARD PATTERN LAYOUT
FOR FULL CARD CONNECTOR
(TOP VIEW)

C-1759513

THIS DRAWING IS A CONTROLLED DOCUMENT.		DWN —	TE Connectivity
DIMENSIONS: MM	TOLERANCES UNLESS OTHERWISE SPECIFIED: 0 PLC ± - 1 PLC ± - 2 PLC ± - 3 PLC ± - 4 PLC ± - ANGLES ± -	CHK —	
		APVD —	NAME 2 IN 1 mSATA & PCI EXPRESS MINI CARD CONNECTOR, 9 MM HEIGHT
		PRODUCT SPEC —	
		APPLICATION SPEC —	SIZE A2 / CAGE CODE 00779 / DRAWING NO C-1759513 / RESTRICTED TO —
MATERIAL —	FINISH —	WEIGHT —	
		CUSTOMER DRAWING	SCALE — / SHEET 2 OF 5 / REV E

THIS DRAWING IS UNPUBLISHED. RELEASED FOR PUBLICATION -,- .
© COPYRIGHT 2011 BY TE CONNECTIVITY. ALL RIGHTS RESERVED.

LOC	DIST
DW	—

REVISIONS

P	LTR	DESCRIPTION	DATE	DWN	APVD
		SEE SHEET 1			

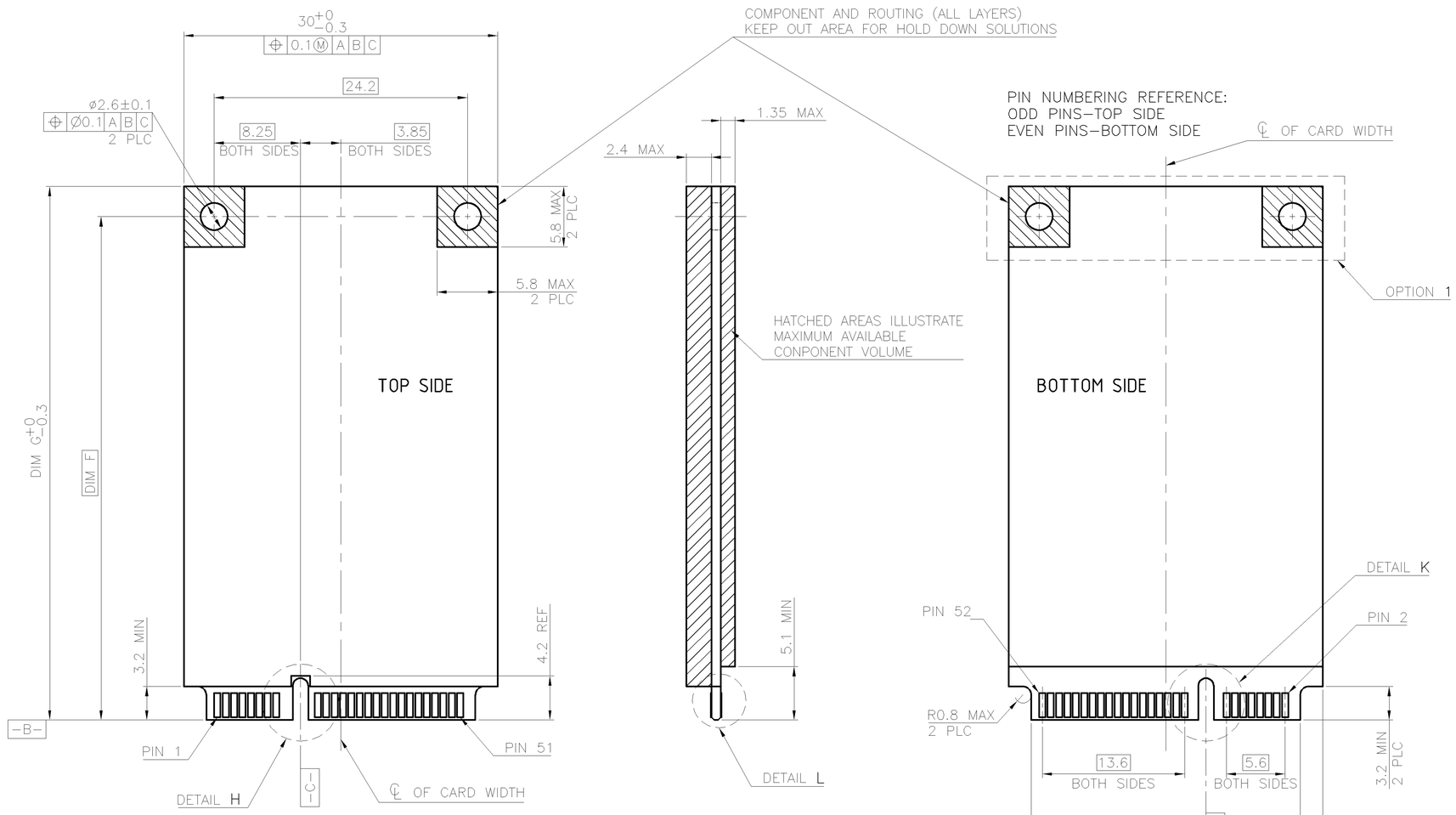

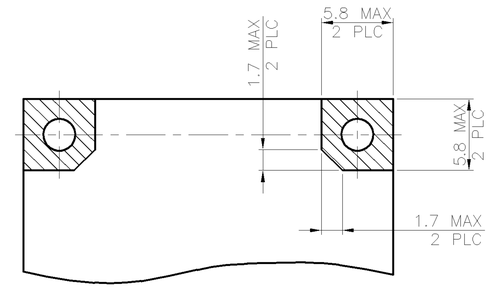

OPTION 1
FOR HALF−MINI CARD
(TOP & BOTTOM SIDE)

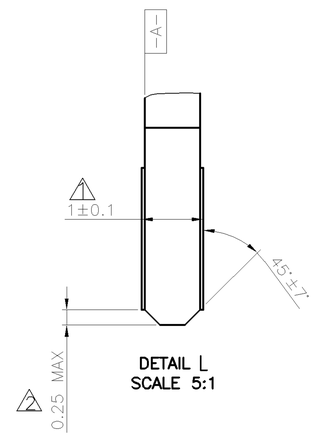

DETAIL L
SCALE 5:1

DIM F	DIM G	
48.05	50.95	FULL−MINI CARD
23.9	26.8	HALF−MINI CARD

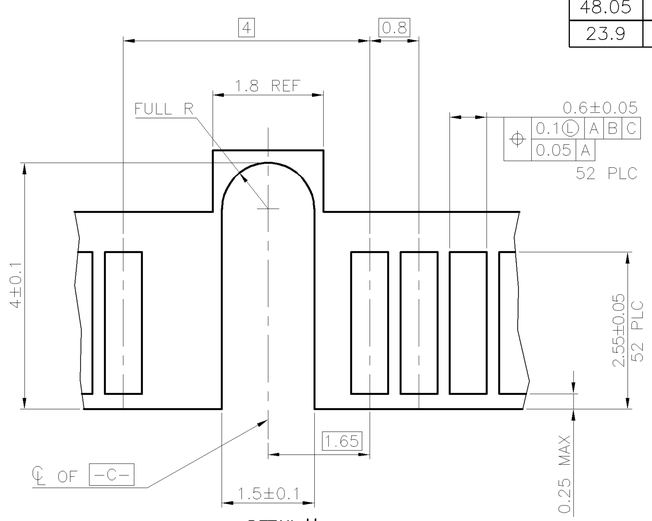

DETAIL H
SCALE 5:1
(TOP SIDE)

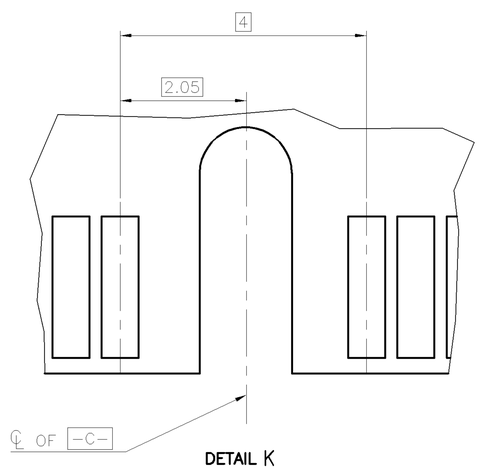

DETAIL K
SCALE 5:1
(BOTTOM SIDE)

NOTES:

1. CARD THICKNESS APPLIES ACROSS TABS AND INCLUDES PLATING AND/OR METALLIZATION.
2. EDGE BEVEL MUST BE PRESENT AND FREE OF CUTTING BURRS FROM PCB AND CONTACT MATERIALS.

FOR PCI EXPRESS MINI CARD

THIS DRAWING IS A CONTROLLED DOCUMENT.

DIMENSIONS: MM

TOLERANCES UNLESS OTHERWISE SPECIFIED:
0 PLC ± –
1 PLC ± –
2 PLC ± –
3 PLC ± –
4 PLC ± –
ANGLES ± –

MATERIAL –
FINISH –

DWN –
CHK –
APVD –
PRODUCT SPEC –
APPLICATION SPEC –
WEIGHT –

TE Connectivity

NAME
2 IN 1 mSATA & PCI EXPRESS
MINI CARD CONNECTOR, 9 MM HEIGHT

SIZE	CAGE CODE	DRAWING NO	RESTRICTED TO
A2	00779	C−1759513	—

CUSTOMER DRAWING | SCALE — | SHEET 3 OF 5 | REV E

C−1759513

1471−9 (3/11)

THIS DRAWING IS UNPUBLISHED. RELEASED FOR PUBLICATION -,- .
© COPYRIGHT 2011 BY TE CONNECTIVITY. ALL RIGHTS RESERVED.

LOC	DIST
DW	—

REVISIONS

P	LTR	DESCRIPTION	DATE	DWN	APVD
		SEE SHEET 1			

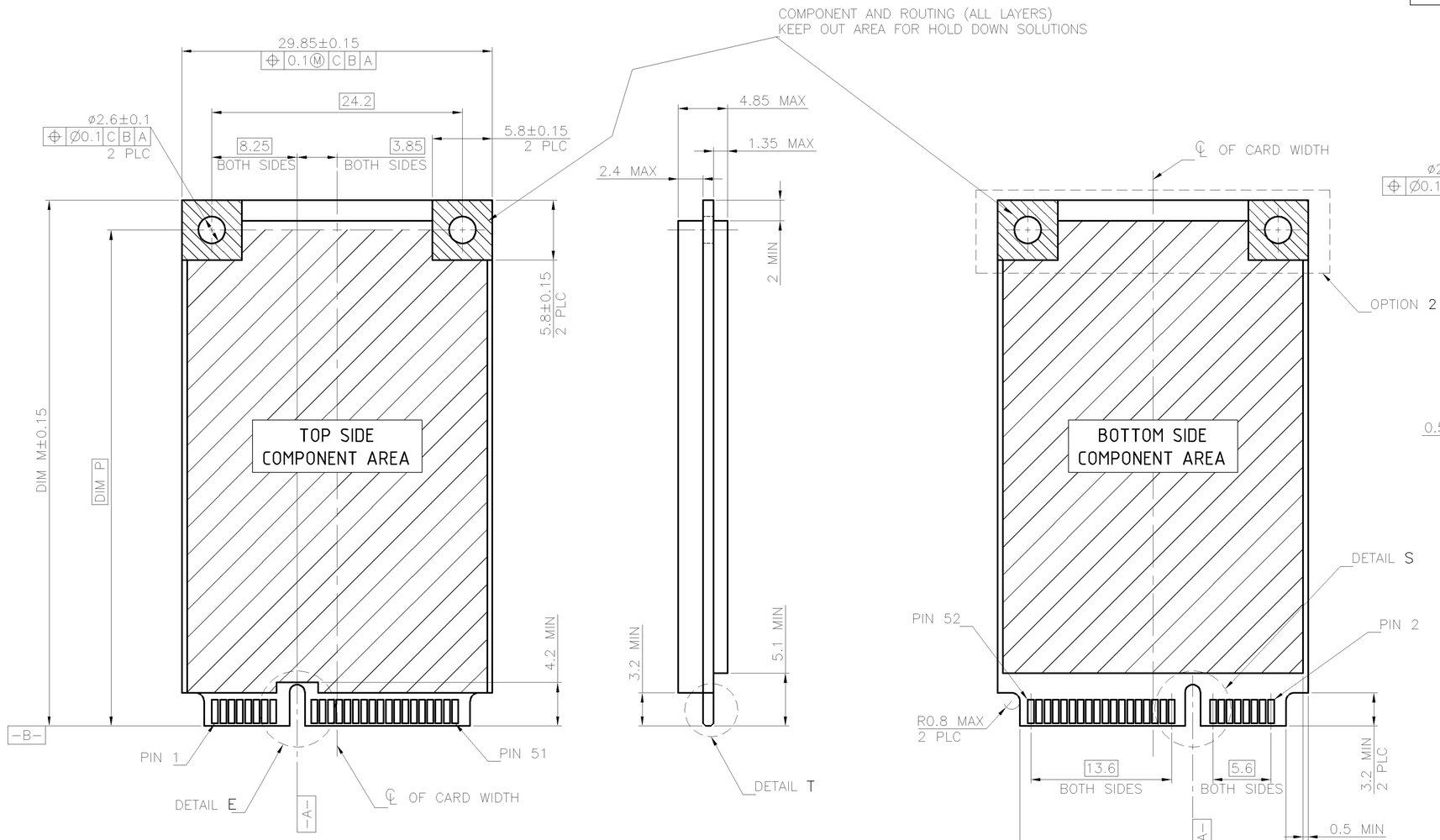

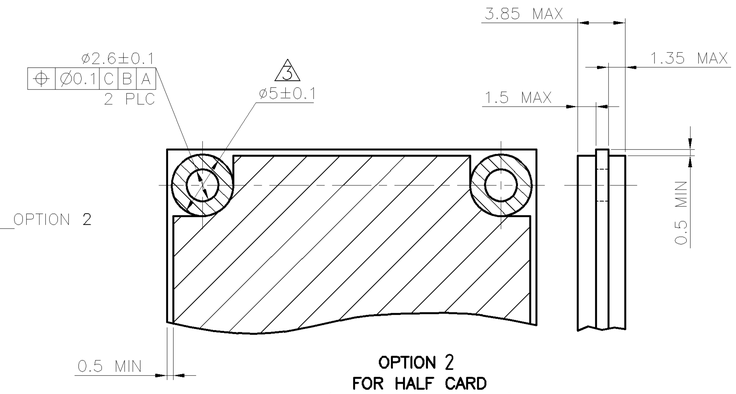

OPTION 2
FOR HALF CARD
(TOP & BOTTOM SIDE)

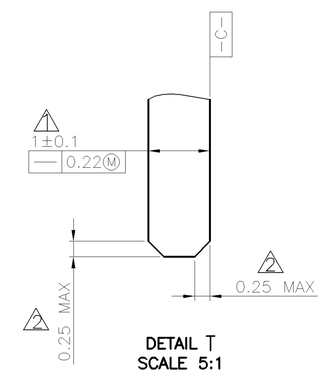

DETAIL T
SCALE 5:1

DIM P	DIM M	
48.05	50.8	FULL CARD
23.9	26.8	HALF CARD

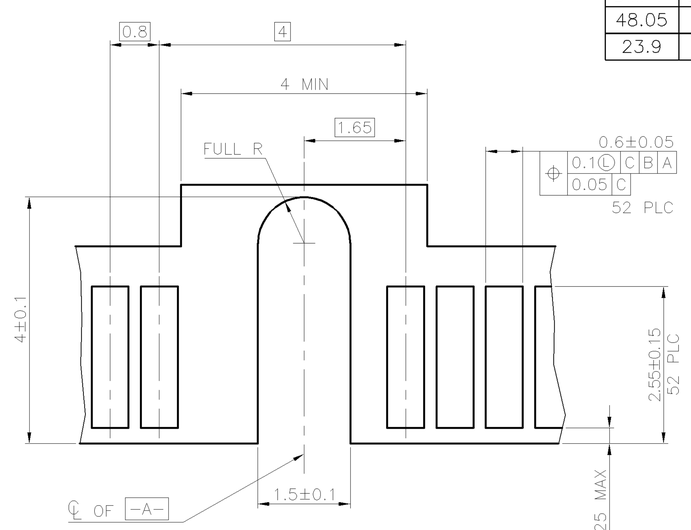

DETAIL E
SCALE 5:1
(TOP SIDE)

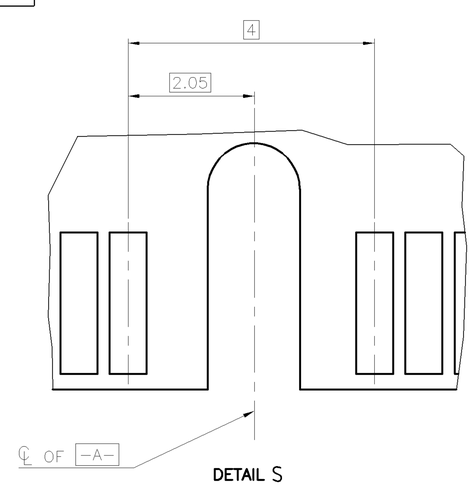

DETAIL S
SCALE 5:1
(BOTTOM SIDE)

NOTES:

1. CARD THICKNESS APPLIES ACROSS TABS AND INCLUDES PLATING AND/OR METALLIZATION.
2. EDGE BEVEL MUST BE PRESENT AND FREE OF CUTTING BURRS FROM PCB AND CONTACT MATERIALS.
3. COMPONENT AND ROUTING (TOP/BOTTOM LAYER) KEEP OUT AREA FOR HOLD DOWN SOLUTIONS.

FOR mSATA

THIS DRAWING IS A CONTROLLED DOCUMENT.

DIMENSIONS: MM

TOLERANCES UNLESS OTHERWISE SPECIFIED:
0 PLC ± -
1 PLC ± -
2 PLC ± -
3 PLC ± -
4 PLC ± -
ANGLES ± -

MATERIAL -
FINISH -

DWN -
CHK -
APVD -
PRODUCT SPEC —
APPLICATION SPEC —
WEIGHT —

TE Connectivity

NAME
2 IN 1 mSATA & PCI EXPRESS MINI CARD CONNECTOR, 9 MM HEIGHT

SIZE	CAGE CODE	DRAWING NO	RESTRICTED TO
A2	00779	C-1759513	—

CUSTOMER DRAWING | SCALE — | SHEET 4 OF 5 | REV E

C-1759513

THIS DRAWING IS UNPUBLISHED. RELEASED FOR PUBLICATION – , – .
© COPYRIGHT 2011 BY TE CONNECTIVITY. ALL RIGHTS RESERVED.

LOC	DIST
DW	—

REVISIONS

P	LTR	DESCRIPTION	DATE	DWN	APVD
		SEE SHEET 1			

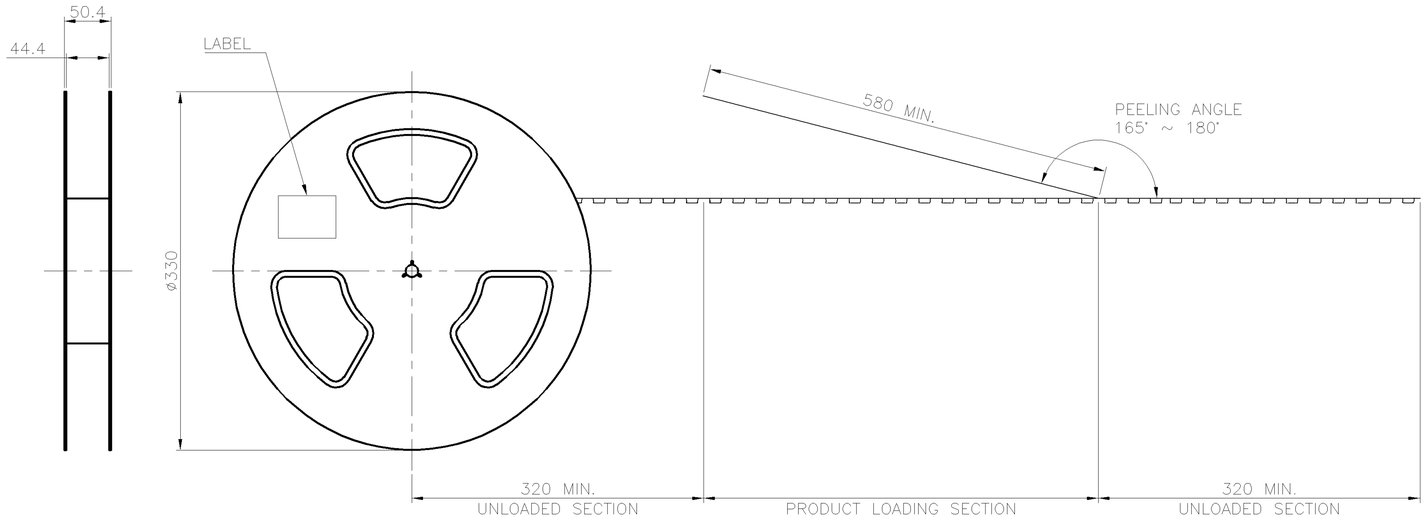

NOTES:

1. MATERIAL:
   BOX: FIBREBOARD, CORRUGATED, DOUBLE WALL.
   COVER TAPE: POLYSTYRENES, TRANSPARENT.
   CARRIER TAPE: POLYSTYRENES, TRANSPARENT.
   REEL: HIPS, BLUE COLOR.
   BAG: POLYETHYLENES, TRANSPARENT.
2. EACH BAG SHALL BE INCLUDED DESICCANT.
3. PEELING STRENGTH: 0.1 ~ 1.3 N (10 ~ 130 GRAMS).
4. PEELING SPEED: 300 mm/min.

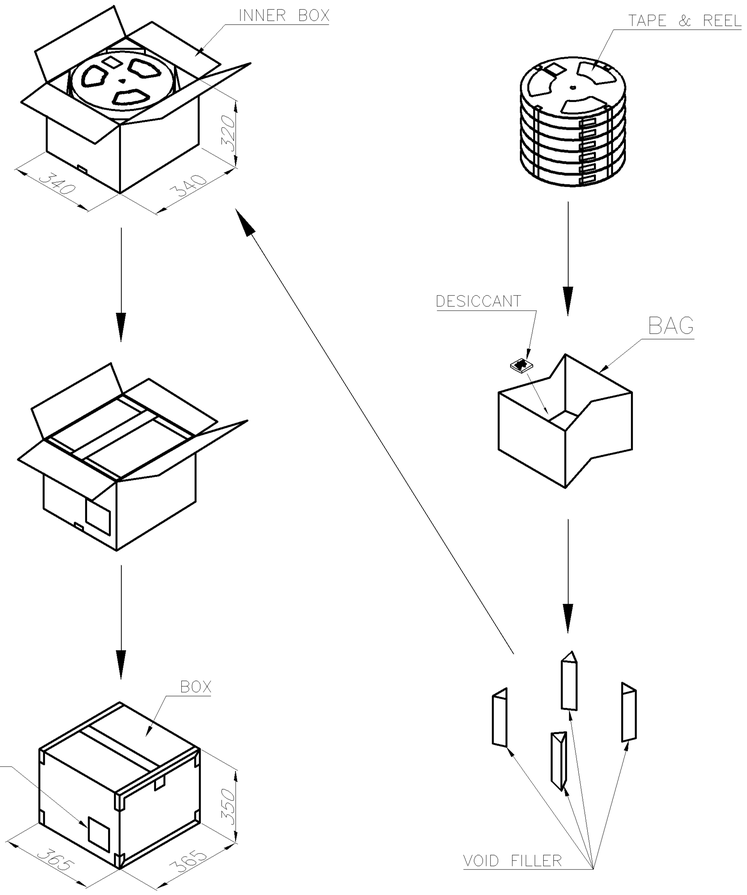

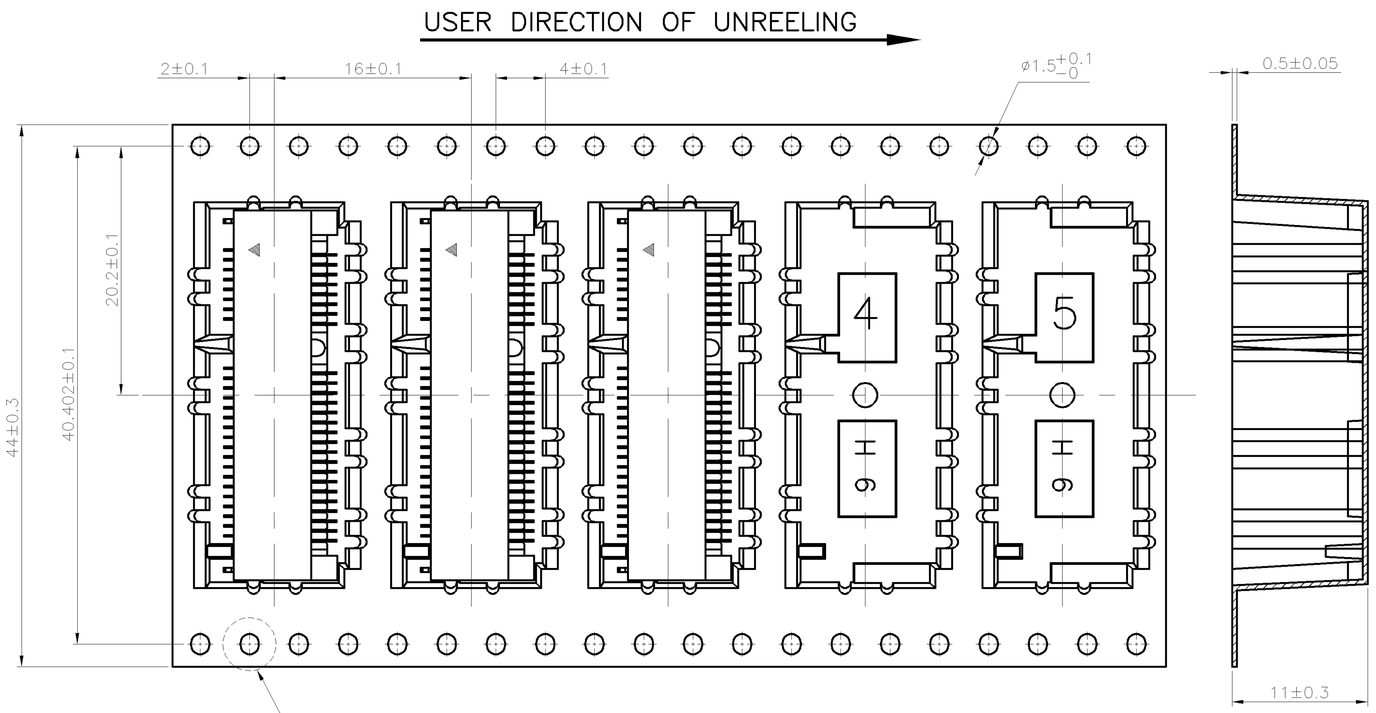

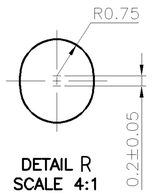

DETAIL R
SCALE 4:1

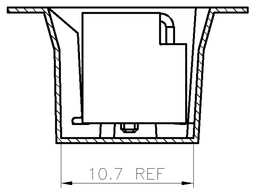

2100	6	350	6.1 Kg	11.1 Kg
PCS/BOX	REELS/BOX	PCS/TAPE	NET WEIGHT	GROSS WEIGHT

THIS DRAWING IS A CONTROLLED DOCUMENT.

DIMENSIONS: MM

TOLERANCES UNLESS OTHERWISE SPECIFIED:
0 PLC ± –
1 PLC ± –
2 PLC ± –
3 PLC ± –
4 PLC ± –
ANGLES ± –

MATERIAL –

FINISH –

DWN –
CHK –
APVD –
PRODUCT SPEC –
APPLICATION SPEC –
WEIGHT –

TE Connectivity

NAME
2 IN 1 mSATA & PCI EXPRESS
MINI CARD CONNECTOR, 9 MM HEIGHT

SIZE	CAGE CODE	DRAWING NO	RESTRICTED TO
A2	00779	C-1759513	—

CUSTOMER DRAWING | SCALE — | SHEET 5 OF 5 | REV E

C-1759513

1471-9 (3/11)